
ARABIAN GROUP
FOR GYPSUM INDUSTRIES & DECOR
Catalogue

بسم الله الرَّحْمَنَ الرَّحَيمَ

In the name of Allah,the Merciful,the Compassionate.

This catalogue is submit for the Memmory of Our Fouder Mr.Omar Saeed Al Aas

The Founder of Arabian Group For Gypsum Industries & Decor

The history of this company is one that is memorable and something that has to be told, the company Arabian Group was founded in 1971, the initial owner Omar Saeed Al Aas passed away from us before 2 years. “O Allaah, forgive and have mercy upon him”.

Mr. Omar Saeed Al Aas(Abu Salah) was a man of passion and one that has had dreams, and it is said that where the Arabian Group company is now, is where Omar Saeed Al Aas would want it to be.The effort and time that many have put into this company after his passing is something that definitely is recorded somewhere.

It is surely known that the quality has only improved over the past years and that the improvements that were made are those that are in the favour of the client. You will come across many people that are asking who makes the best gypsum products in U.A.E,the idea when answering this, is to give them one name Arabian Group. The standards of quality as well as excellence are what this company is well known for and this has been coming from the time that Omar Saeed was around. This is really something and someone that everyone should get to learn about.The way the Arabian group pgypsum products industries works that, when you place a order for a design,it is only then that the product is manufactured.The first products was made over 40 years ago under the GTG name, this is another aspect that would put your mind at rest, Omar Saeed Al Aas had a goal when he started the Arabian Group, and that was to develop and manufacture the best price and quality.

Our Sister Concerns

1.Al Aas Group (L.L.C)
2.Trading Group (gypsum Decor works L.L.C)
3.General Trading Group (L.L.C)
4.Arabian Contracting co.(L.L.C)
5.Mudin Al Tawfeeq contracting co.(L.L.C)
6.Saaba Contracting for Electrical & Mechanical Est.
7.Horizon For Medical equipments.

Contents

Pages	Contents
1	About us
2	Raw materials and Method of manufacturing
3	G.T.G and G.R.G Ceiling tiles
4	Moulding & manufacturing,Quality Control
5	Plaster boards Metal strip ceiling system
6	Decor acessories and tools
7	Organizing chart and Optional process
8	Pictures of our some decor works
9 to 50	Cornice
51 to 60	Bano
61 to 89	Flower
90 to 99	Corner
101 to 102	Base
103 to 108	Crown
109 to 116	Colomn
117 to 124	Decor
125 to 126	Dome
127 to 133	Tiles
134 to 137	G.R.G. Tiles
138 to 139	G.T.G. Tiles
140	Location map

We, **Arabian Group for gypsum industries & decor** (**AL AAS GROUP L.L.C**) were established in 1972, one of the leading group of companies in United Arab Emirates. We are in gypsum decoration accessories manufactures and suppliers,located in AL AIN,U.A.E. We use ultra modern equipments to ensure the optimum quality production..The **Arabian Group for gypsum industries & decor;** based company engaged in providing quality service and quality products to customer.





ARABIAN GROUP FOR GYPSUM INDUSTRIES & DECOR CO; is a manu-facture,importer & project interior contractor for gypsum plaster,gypsum decorative cornices,artistic ceilings and all type of false ceiling works.As part of its ongoing quest to develop and deliver the best for its customers. Arabian Group dedicated all its efforts and energies to work on upgrading its products and outstanding service to satisfy its customers in order to achieve the best and no more, even won in 1999, Sheikh Khalifa Award for industry development plans and performance.

We well equipped and fully skilled to produce the very bes quality of gypsum molding laminated ceiling tiles and GRG tiles,also we do have highly technical and skilled team for installationfor false ceilings and all type of gypsum work.

The strength of our group lies in the ability to meet the ever changing needs of its customers. **Our** policy of the company is to deliver highest quality and innovative products backed with reliable supplies to its world wide customer's base and to be cost effective and environmental friendly.

One of the high quality products has ensured their place in market and being regularly specified by some of the leading international consultants through out U.A.E.

With reasonable prices and excellent service to our customers for the last three decade.Our products are very popular and widely exporting to the Gulf countries,Algeria,Egypt,Jordan,Lebnon and republic of Yemen. Great attention has been given to the quality of work.To maintain a suitable leader that is able to interpret, outline and adopt each of our customer requirements. Our mission is proper selection and examine materials of the highest quality to ensure that all materials and systems incorporates in to work are suitable and safe to operate and make sure that goods and systems are installed in the proper manner.To plan, control and documentin a systematic manner those procedures necessary to provide the specified level of quality assurance .
Great attention has been given to the quality of works.

تعتبر المجموعة العربية للصناعات الجبسية والديكورات الأولى في مجال صناعة الجبس في دولة الإمارات العربية المتحدة
حيث أنشأت المجموعة العربية عام 1972 وهي إحدى شركات مجموعة العاص ذ.م.م الرائدة في مجال التعمير والإنشاءات.

وفي إطار سعيها الدائم للتطوير وتقديم الأفضل لعملائها الكرام، كرست المجموعة العربية كل جهودها وطاقاتها في العمل على الإرتقاء بمنتجاتها والخدمة المتميزة لعملائها سعياً لتحقيق الأفضل لا غير، حتى نالت في عام 1999 جائزة الشيخ خليفة للصناعة لنمط التطوير والأداء المتميز



المقدمة
Introduction

GTG BRAND PVC LAMINATED GYPSUM TILES

GIG brand laminated ceiling panels is the most superior way to interior decoration to fulfil your individual requirement for iterior decoration and various patterned lamination has a natural beauty in design with a toughof elegance and beauty with alternative back covers including aluminium foil and red PVC.



These tiles are suitable for educational intitutions,hospitals, shopping malls, offices and restuarents etc.
There are neither known poisonous gases nor corrosion at high humidity. GTG brand tiles provide outstanding advantages serving our esteemed customers. Tiles are available in **19** patterns with following specifications.

PVC ceiling tile made by us with advantages as follows:

1. Fire-proof and heat insulation 2. High intensity and strong tension, hard to twist under pressure. 3. Light weight, our ceiling tiles are 20% lighter than common ceiling, 10% lighter than common gypsum boards. 4 .Sound insulation. 5. Suitable price: compared with ceiling tile made of other materials, the price of gypsum ceiling is more competitive in the market, low cost and extensive use makes it the best choice for decotation.

G.T.G BRAND-GRG SUSPENDED CEILING TILES

The tiles are normally supplied in their natural white finish or can be pre-decorated to older.They can also be decoratedin-suit to individual requirements using or oil-based paints. The tiles are fully demountable and non-combustible will not support growth of bacteria or other micro organism and high standards of thermal conductivity and resistance.

The tiles are zero rates for smoke emission,no toxic fumes are given off life reflectance of self-finished tiles are able to achive noise reduction coefficients.



Specifications
1.Superb price and quality.
2.Fire,water and mould resistant.
3.Over 45 patterns selectable.
4.Ceiling decoration.

Features:
1.Deversified patterns.
2.Fire , water , yellowing and mould resistance.
3.Light weight but strong.
4.Easy to clean.
5.No color abberatio.

RAW MATERIALS

Gypsum powder is importing from Qatar (Qatari Saudi Gypsum Industries co.(W.L.L) colour of gypsum powder is bright white,German standard -DIN 1168 Gypsum powder can be stored for three months from the date of production in good condition and we are storing in dry store. Gypsum powder packed in three ply bags and each bagof 33.3 kgs.We using glass fibre which importing from Germany (Kirson) andin special requirements using natural fibre.



The Hessian is made from natural, 100% jute, with a rougher, more open weave with some burls in it - great for inside gypsum cornice and cover around the central Ac Evaperator.Natural fiber a penny saved is a penny gained in resin has very good liquidity and dispersed evenly and good resistant temperature.Gypsum Cornice Mould is made by the glass fiber reinforced plastic or and rubber Silicone rubber for gypsum product mould making is flowing liquid with general hardness of 25-30A after curing.And the color can be adjusted by customer's requirements. Mould making silicone rubber is a kind elastic silicone rubber mould which features with resistance to deformation , high temperature, acid-alkali and expansion as well as high reproduction times, good tensile strength, tear strength and enlongtion.

METHOD OF MANUFACTURING

Designing:-

The architecher /Graphic designer draw the design and models These products are hand made by dedicated and skilled craftsmen using methods and materials handed down to themWhen designs, conditions and costs are agreed we will carry out the work always with our own fully trained, very qualifiedand fully employed staff.

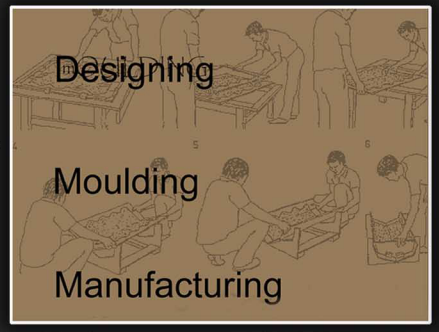



Moulding & Manufacturing:-









Gypsum powder is tobe well mixed with clean water until theplaster has to be ready to put on rubber mould complete process is done by hand.First of all we well cleaned the rubber moild with clean water,little gypsum paste putting on mould and spreading every corner of mould,again S quantity of gypsum paste. All instruments must be cleaned with water before use as well as after use.





After finish the products we are hanged on hooks so it will dry fast. During winter season we keep our dry room temperature high by room heater.Here at The Cornice Factory we offer a wide variety of cornices .Remember that all of our cornices are custom made, If you do not see a style that you like, we can make anything that you wish. Just give us a drawing,picture, or even a template of an existing cornice that you already have.



We will do our best to accommodate.

QUALITY CONTROL

Quality Check®





The Quality controller will check all finished products and the certified goods to be raedy for sale,the defect products will be rejected and will go to packing section and we use packing support for goods safe transporting. Smooth surface, clear flower pattern, obvious three- dimension effect,high strength, and excellent constructive performance. It is fire proof, mildew and worm resistant, moisture proof, and sound and heat insulated. It can be processed by sawing, digging, nailing, adhering and patching,and therefore it is easy and convenient in construction.





Our high standard of quality control ensures that our customers get the most out of there mouldings. We manufacture every job to order to make certain that our clients get exactly what they want.

To make sure our customers are satisfied .

High quality with the competitive price

PLASTER BOARDS

Plaster boards are available standard dimensions and different variety from Knauf, Elephant and NGC (Saudi) brand.Plaster boards has been widely used as an interior building material both for wall and ceiling systems offering short time to construction, easy intallation, higher esistance to fire, greater economy than other building materials.



Features of gypsum board:

paper faced gysum board is a lightweight panel which use gypsum power as raw material, it use Glossy paper at the two size.The board have many advantage such as lightweight, high strength, fire prevention,moth,moisure resistant,water proof, sound proof,easyprocessing and so on.



Paper faced gyspum board are widly used for wall partition (include inner wall,wall)and ceiling.water resistant gypsum board can be used for wall of humidity room, such as the bathroom, kitchen, warehouse and so on.Fire rated gypsum board is filled in some addtive in the gypsum core,so it notonly have the advantage of common gypsum board, but also can let the refractory time longer.
In this way to save the precious escape time.



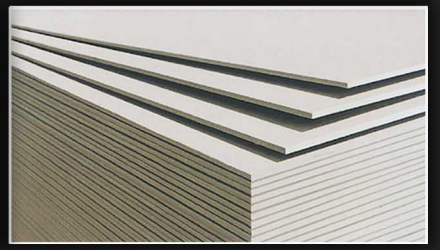

Specifications:

Type:
Standard(common) gypsum board
Moisture resistant gypsum board
Fire rated gypsum board
Water proof gypsum board
The complete range products is supported by a substantial technical service,You will find a solution for your constructinal problems with ARABIAN GROUP.

METAL STRIP CEILING SYSTEM

Metal strip ceiling systems are available in standard size,wide range of colours,choice of patterns and standard specification. All components have a corrosion resistant finish suitable for areas of normal temperature and humidity.Routine maintenance is normally necessary.

The suspension system is easily assembled without the need for special tools. Panels can cut, where eccessary,with cutting scissors or nibblers.

Panels can be cleaned using mild detergent in warm water,sprits and solvents should not be used.



Decor acessories and tools

Aluminum Tiles :-1.strong corrupt proof aluminum ceiling tile 2.600*600mm or customized alu-ceiling tile
Tracks :-The better size and the lighter weight for easier use and installation.Good quality and different sizes.
Studs:- Hot dipped galvanized materials ireproofing,humidity resistance
Board channels:-high-quality hot dipped galvanized steel coil Length and thickness can be customized as customers request If any of our products be of interested to you
Furing Channels :- The ceiling furring system is suitable for most commercial, recreational and retail applications as well as residential developments such as flats and apartments.high quality good price
Main Channels:- 1)Good and Stable quality 2) Strong bearing capacity 3)Non-deforming,fadeless
Main Runners :- Main Runner, Main Tee – Primary or main beams of the type of ceiling suspension system in which the structural members are mechanically locked together. Fireproof, Heat Insulation, Sound-Abs..
Cross Tees:- cross tee are made of galvanized steel and color steel. This production can be made of different size which is according to different size of ceiling board.Ceiling T grids has many advantages, include: beauty, good strength, cauterizationresistance, and water resistance.
Wall Angles:-Ceiling t bar is suspension false ceiling consisting of the main tee,cross tee and wall angle to make the grid system to support the lay-in ceiling tiles.It is easy for installation and maintance.
Drill bits:-Available diffrent sizes
Gypsum Board Wall Angles:-All size perforated wall angle, material is gavalnized or Aluminum, used for the dry wall system.
S**pring Tees**:- Surface smoothness Flexible suspension system makes each ceiling tile easilyinstalled and disconnected)Easy to match lamps or other ceiling parts
Tee grids :- Ceiling support bar,ceiling suspension t barhigh quality materials ,moisture proof antisepticise , ametabolic ,fastness.
Edge Trims:- Surface Treatment: oxidation , polished , powder coated,dimension as per your request
Clips :- Also called u type clip,we also have:extender,double spring,loop eye,reversible hanger,cross coupling, anchor angle,etc. **Suspension clips:-**It assists t-grid to install various ceiling tile
Channel brackets:- Size can according to customers' drawings or samples
Nail clips:- Round Cable Clip(Circle Cable Clip), Flat Cable Clip, Hook Cable Clip
Catridge:- Aluminum alloy catridge **,** heavy duty **Screws and Nail:-** Available diffrent sizes
Fibre tapes:-High quality,low price,fast ship
Hanging wires:- Galvanized steel wire is classified into hot dipped galvanized wire and electro-galvanized wire.
Fishers:-Nylon and PE anchor fisher with nail
Joining compounds:-Specially formulated for quality finishing ofdrywall joints. A ready-mixed/Non Asbestos vinyl compound used forembedding Joint Fibre Tape, for filling and for final touch-up coats ininterior gypsum panel applications. It is ideal material for coveringembedded fasteners, corner beads, and for skim coating gypsum panelsurfaces where necessary.



















Pictures of our some decor works

































ARABIAN GROUP
(Gypsum Industries&Decor)

ORGANIZING CHART

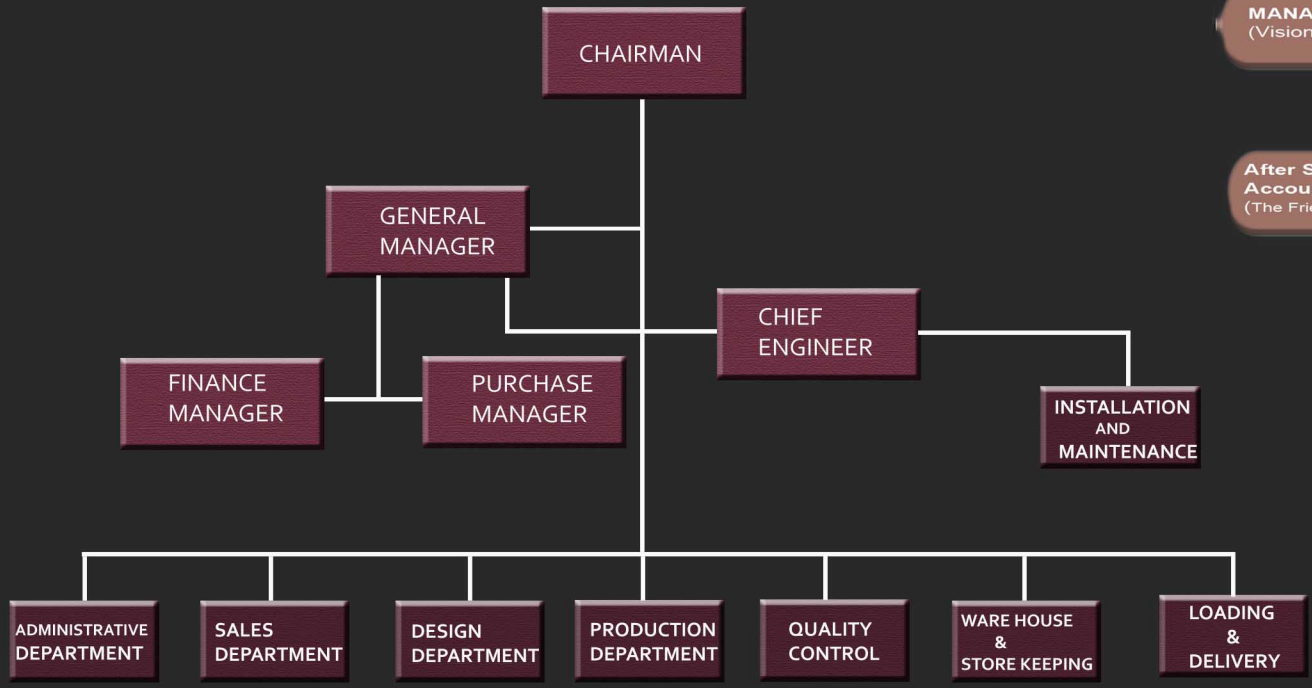

Operational process



Awards and prizes









المقدمة
Introduction

CN-1154



26 Cm



CN-1155 — 190 Cm



13 Cm



CN-1163 — 160 Cm



17 Cm



CN-1164 — 193 Cm



22 Cm



CN-1165 — 198 Cm



21 Cm



CN-1190 — 198 Cm



17 Cm



CN-1191 — 200.5 Cm



18 Cm



CN-1192 — 200 Cm



30 Cm



198 Cm

CN-1192-A



33 Cm



CN-1193 — 199 Cm



12 Cm



CN-1194 — 200 Cm



14 Cm



CN-1195 — 200 Cm



14.5Cm



CN-1196 — 200Cm



14 Cm



CN-1197 — 200.5 Cm



18 Cm



CN-1197-A — 198.5 Cm



12.5 Cm



CN-1198 — 199 Cm



14 Cm



CN-1199 — 200 Cm



27 Cm



200 Cm

CN-1214



16 Cm

CN-1219

197 Cm



19 Cm

CN-2001

159 Cm



14 Cm

CN-2002

200 Cm



22 Cm

CN-2003

200 Cm



29 Cm

CN-2003-A

200 Cm



19.5 Cm

CN-2004

199 Cm



27 Cm

CN-2005

198.5 Cm



11.5 Cm

199.5 Cm

CN-2005-A



8 Cm

CN-2006

180 Cm



21Cm

CN-2007

199.5Cm



21 Cm

CN-2008

199 Cm

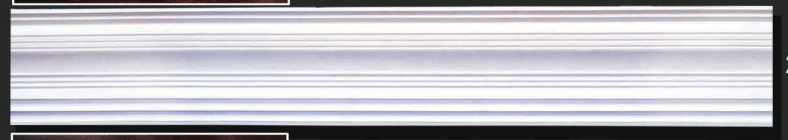

23 Cm

CN-2009

200 Cm



17 Cm

CN-2010

199.5 Cm



24 Cm

CN-2011

199.5 Cm



15 Cm

CN-2012

196.5 Cm



16 Cm

200 Cm

CN-2013



CN-2014

197.5 Cm



CN-2015

199 Cm



CN-2016

200Cm

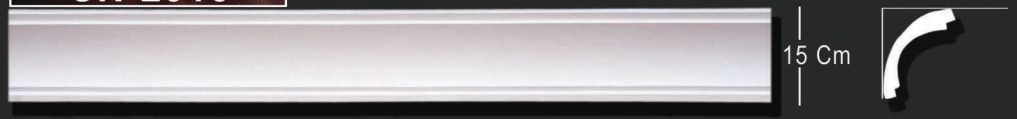

CN-2017

200 Cm



CN-2018

198 Cm



CN-2020

198.5 Cm



198.5 Cm

CN-2021

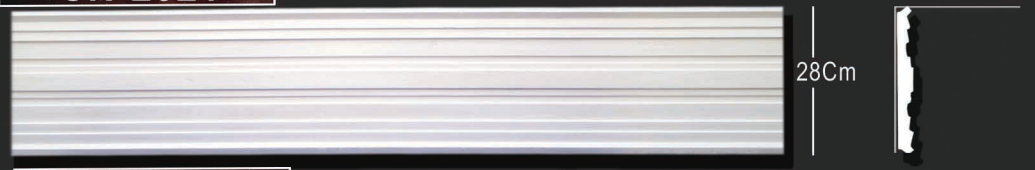

CN-2021-A

198 Cm



CN-2022

200 Cm



CN-2023

200 Cm

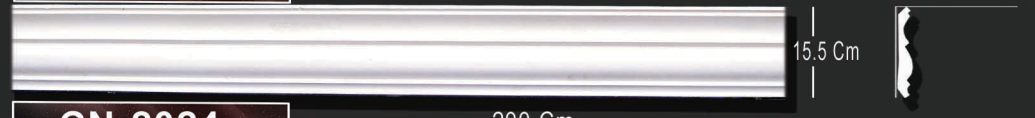

CN-2024

200 Cm



CN-2025

200 Cm



CN-2026

199 Cm



CN-2027

200 Cm



196.5 Cm

CN-2027-A



CN-2030

200 Cm



CN-2100

196.5 Cm



CN-2101

200 Cm



CN-2102

200 Cm



CN-2103

200 Cm



CN-2104

200.5 Cm

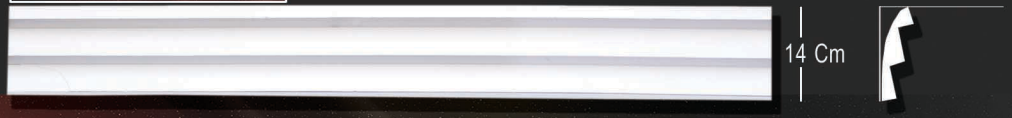

200 Cm

CN-2105



CN-2106

200.5 Cm



CN-2107

200 Cm



CN-2108

200 Cm



CN-2109

200 Cm



CN-2110

200 Cm

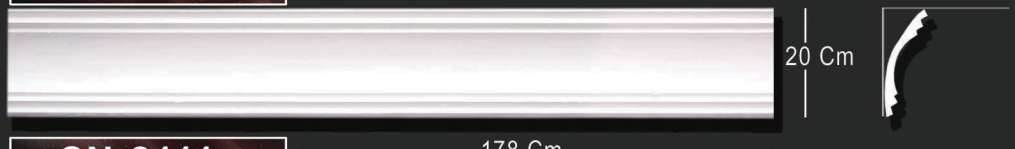

CN-2111

178 Cm

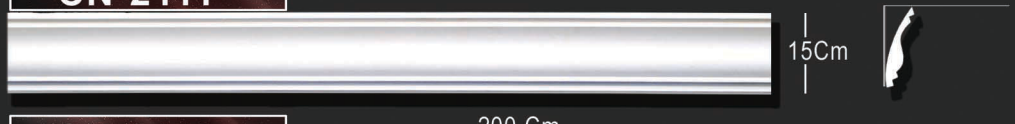

CN-2112

200 Cm



200 Cm

CN-2113



CN-2114 — 200 Cm



CN-2115 — 200 Cm



CN-2116 — 200 Cm



CN-2117 — 200 Cm



CN-2118 — 200 Cm



CN-2118-A — 200 Cm



201.5 Cm

CN-2119



CN-2120 — 200 Cm



CN-2121 — 200 Cm



CN-2122 — 150 Cm



CN-2123 — 200 Cm



CN-2124 — 200 Cm



CN-2125 — 180 Cm



CN-2126 — 190 Cm



200 Cm

CN-2127



CN-2128

150 Cm



CN-2129

200 Cm



CN-2130

200 Cm



CN-2131

189 Cm



CN-2132

194 Cm



CN-2133

200 Cm



200 Cm

CN-2134



CN-2135

198 Cm



CN-2136

200 Cm



CN-2137

200 Cm



CN-2138

200 Cm



CN-2140

200 Cm



CN-2141

176 Cm



175 Cm

CN-2146



8 Cm



CN-2147

195 Cm



15.5 Cm



CN-2148

200 Cm

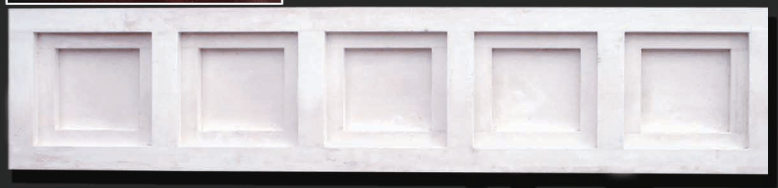

20 Cm



CN-2165

187 Cm



16 Cm



CN-2173

200 Cm



22 Cm



CN-2179

200 Cm



15 Cm



CN-2181

199.5 Cm



15 Cm



200 Cm

CN-3001



27 Cm



200 Cm

CN-3002



21 Cm



199.5 Cm

CN-3003



18 Cm



199 Cm

CN-3004



24 Cm



199 Cm

CN-3006



17 Cm



199.5 Cm

CN-3100



31.5 Cm



179 Cm

CN-3101



CN-3102



CN-3103

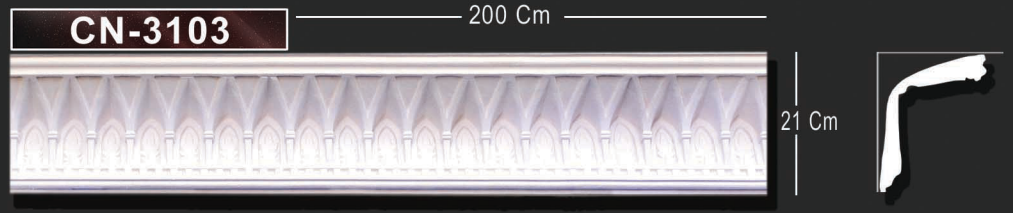

CN-3104

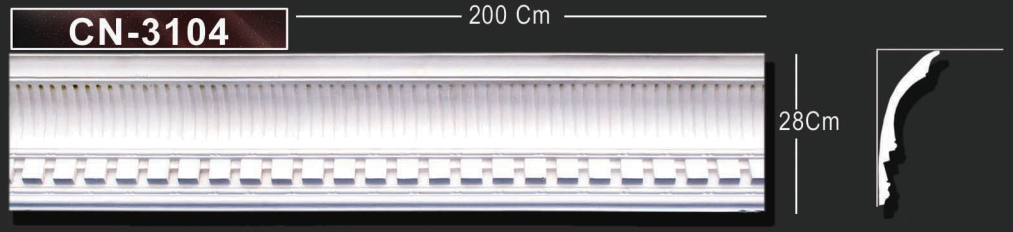

CN-3105



CN-3106



CN-3107



CN-3108



CN-3109



CN-3110

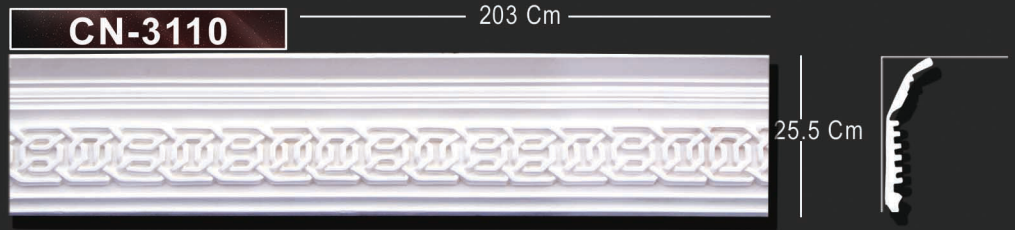

CN-3111

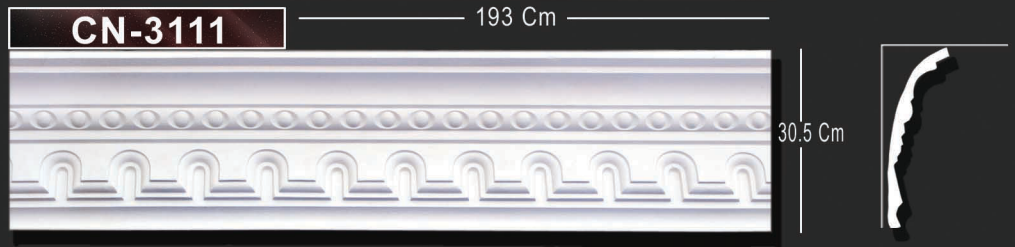

CN-3112

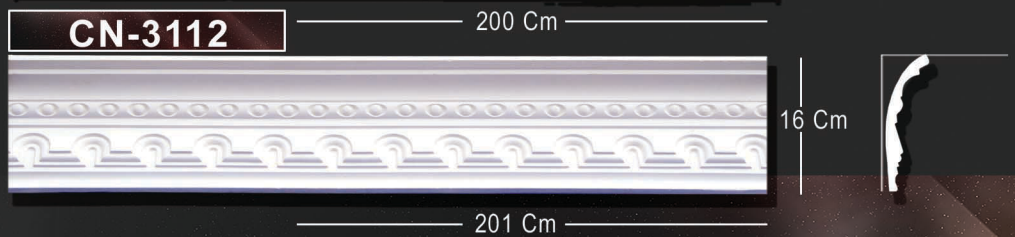

CN-3114



CN-3115



CN-3116



CN-3117



CN-3118

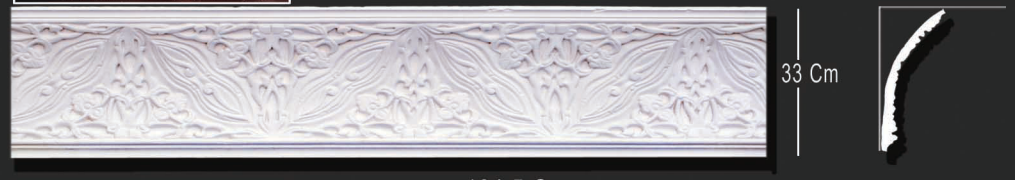

CN-3120



CN-3121



CN-3122



CN-3126



CN-3127



CN-3129



CN-3130



CN-3131



CN-3132



191 Cm

CN-3133



150 Cm

CN-3134



201 Cm

CN-3135



181 Cm

CN-3136



192.5 Cm

CN-3137



196 Cm

CN-3138



194 Cm

CN-3139



190 Cm

CN-3140



190 Cm

CN-3141



190 Cm

CN-3142



195 Cm

CN-3143



191.5 Cm

CN-3144



195 Cm

CN-3145



193 Cm

CN-3146



197 Cm

CN-3147



199 Cm

CN-3148



16 Cm

197.5 Cm

CN-3149



13.5 Cm

200 Cm

CN-3150



14.5 Cm

198.5 Cm

CN-3151



17.5 Cm

200 Cm

CN-3152



18 Cm

160 Cm

CN-3153



14 Cm

198.5 Cm

CN-3154



12 Cm

189.5 Cm

CN-3155



15 Cm

195 Cm

CN-3156



8.5 Cm

196.5 Cm

CN-3157



12.5 Cm

200 Cm

CN-3158



13.5Cm

193.5 Cm

CN-3159



12 Cm

193.5 Cm

CN-3160



13.5 Cm

200 Cm

CN-3161



14 Cm

200 Cm

CN-3163



13.5 Cm

195.5 Cm

CN-3164



CN-3165



CN-3166



CN-3167



CN-3168

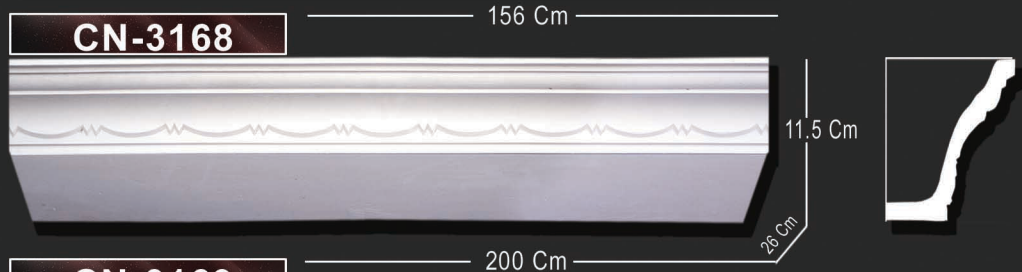

CN-3169



CN-3170



CN-3171



CN-3172



CN-3173



CN-3174



CN-3175



CN-3176



CN-3177



CN-3180



CN-3181



CN-3182



CN-3183



CN-3184



CN-3185



CN-3186



CN-3188



CN-3189



CN-3190

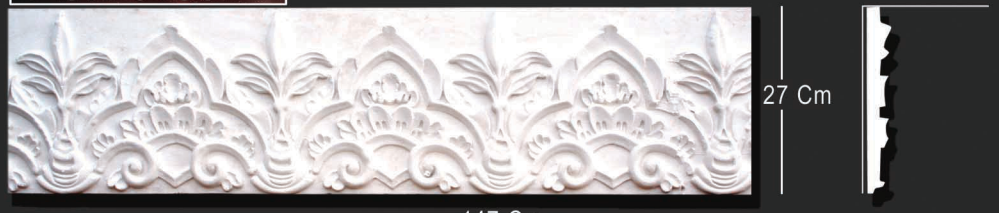

CN-3191



CN-3192



CN-3193



CN-3195



CN-3196

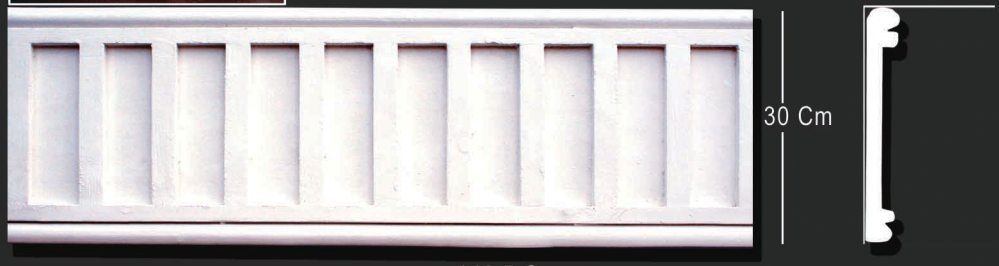

CN-3197

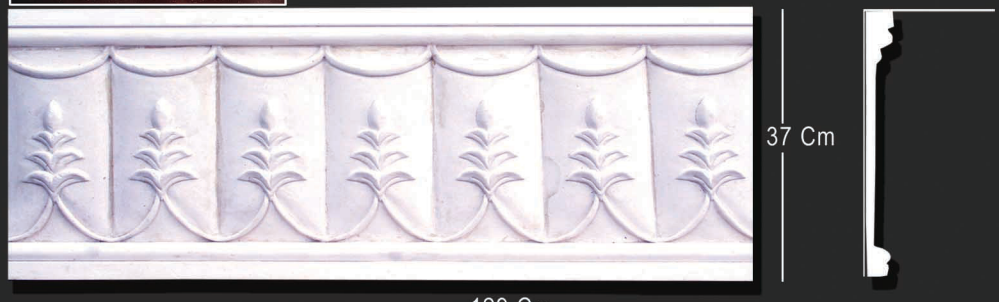

CN-3198

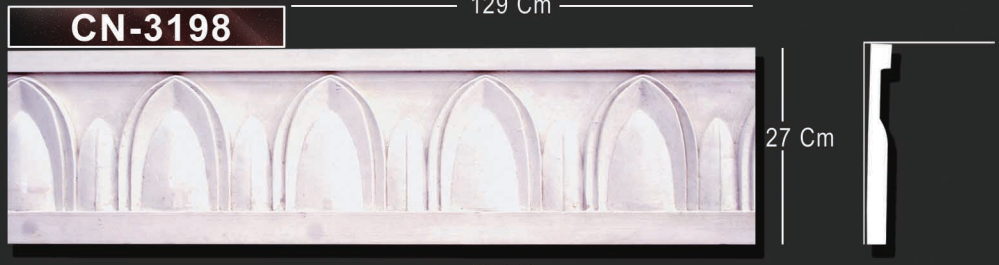

CN-3199



CN-3200



CN-3201

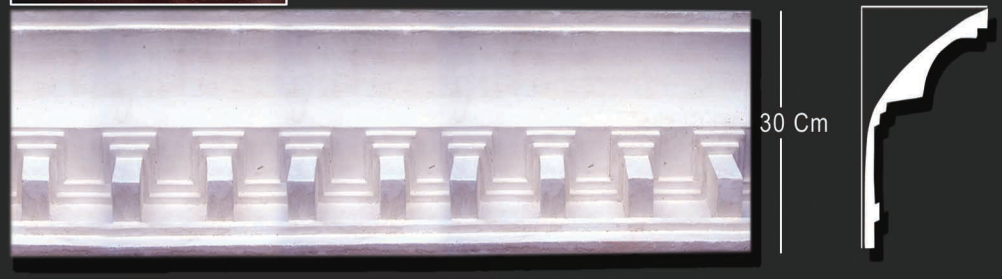

CN-3202



CN-3203



CN-3204



CN-3205



CN-3206-A



CN-3206



CN-3207



CN-3208



CN-3209



CN-3210



CN-3211



CN-3212



CN-3213



CN-3214



CN-3215



CN-3216



CN-3217



CN-3218



CN-3219



CN-3220



CN-3223



CN-4100



CN-4101



CN-4102



CN-4103



CN-4104



CN-4105



CN-4106



CN-4200



CN-4203



CN-4204



CN-4205



CN-4206



CN-4206-A



CN-4207



CN-4208



CN-4209



CN-4210

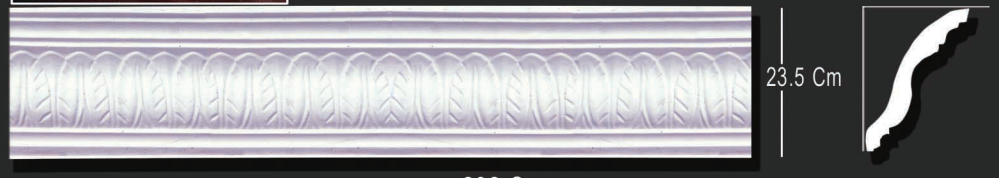

CN-4242



CN-4441



CN-4445



CN-4446



CN-4475



CN-4485



CN-4486



CN-4487



CN-4488



CN-4489



CN-4504



CN-4532



CN-4533



CN-4534



CN-4545



CN-4546



CN-4547



18 Cm

196 Cm



CN-4548



28 Cm

204 Cm



CN-5243



27 Cm

198 Cm



CN-5243-A

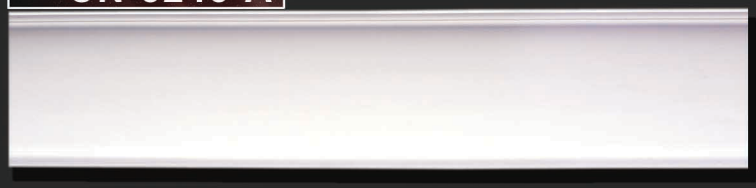

27.5 Cm

200 Cm



CN-5244



28 Cm

196 Cm



CN-5245



23 Cm

200 Cm



CN-5246



25 Cm

202 Cm



CN-5247



35 Cm

147 Cm



CN-5248



35 Cm

160 Cm



CN-5249



29 Cm

191 Cm



CN-5252



25 Cm

210 Cm



CN-5253



21 Cm

200 Cm

CN-5253-A



40 Cm

100 Cm

CN-5254



25 Cm

203 Cm

CN-5255



25 Cm

210 Cm

CN-5256



26 Cm

204 Cm

CN-5257



26 Cm

184 Cm

CN-5258



30 Cm

200.5 Cm

CN-5259



24 Cm

204 Cm

CN-5266



28 Cm

193 Cm

CN-5386



23 Cm

206.5 Cm

CN-5396



CN-5601



CN-5601-A



CN-5666



CN-5814



CN-5859



CN-5896



CN-5909



CN-5960



CN-5961



CN-5962



CN-5963



CN-5964



CN-5965



CN-5966



CN-5967



CN-5968



CN-5969



CN-5970



CN-5982



CN-5983



22 Cm

200 Cm

CN-5984



19 Cm

190 Cm

CN-5985



24.5 Cm

186.5 Cm

CN-5986



23.5 Cm

213.5 Cm

CN-5987



22 Cm

203 Cm

CN-5987-A



16 Cm

200 Cm

CN-5987-B



19.5 Cm

200 Cm

CN-5988



32 Cm

193 Cm

CN-5989



23 Cm

205 Cm

CN-5990



18 Cm

200 Cm

CN-5999



29 Cm

185 Cm

CN-6015



18 Cm

150 Cm

CN-6016



26 Cm

200 Cm



CN-6018



19.5 Cm

200 Cm



CN-6018-A



40 Cm

100 Cm



CN-6025



29.5 Cm

198 Cm



CN-6026



29 Cm

195 Cm

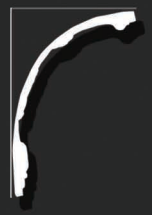

CN-6026-A



12 Cm

196.5 Cm



CN-6026-B



14 Cm

180 Cm



CN-6026-C



10 Cm

146 Cm



CN-6028



29 Cm

201 Cm



CN-6028-A



23 Cm

201 Cm



CN-6029



25 Cm

194.5 Cm



CN-6030



CN-6035



CN-6037



CN-6038



CN-6039



CN-6040



CN-6045



CN-6050



CN-6051



CN-6052



CN-6055



CN-6056



CN-6057



CN-6058



CN-6145



CN-6149



CN-6285



CN-6535



CN-6536



CN-6537

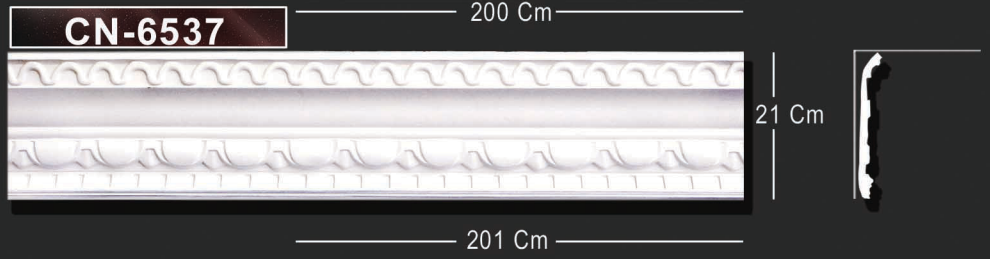

CN-6645



CN-6646



CN-6647



CN-6648



CN-6648-A

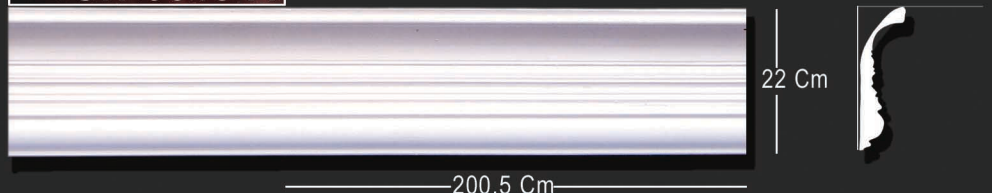

CN-6649



CN-6775



CN-6777



CN-6778



CN-6779



CN-6987



19 Cm

191 Cm

CN-6987-A



16.5 Cm

201 Cm

CN-7020



19 Cm

196 Cm

CN-7022



24 Cm

186 Cm

CN-7069



35 Cm

152 Cm

CN-7105



22 Cm

200 Cm

CN-7106



20 Cm

196 Cm

CN-7107



12 Cm

200 Cm

CN-7108



14.5 Cm

200 Cm

CN-7202



31 Cm

196 Cm

CN-7203



28 Cm

200 Cm

CN-7206



30 Cm

176 Cm

CN-7331



48 Cm

205 Cm



CN-7332



20 Cm

199 Cm



CN-7332-A



15 Cm

199 Cm



CN-7514



20 Cm

199 Cm



CN-7514-A



20 Cm

198 Cm



CN-7518



31 Cm

200 Cm



CN-7520



30 Cm

198 Cm



CN-7587



30 Cm

200 Cm



CN-7587-A



16 Cm

200 Cm



CN-7588



24 Cm

200 Cm



CN-7596



20 Cm

197 Cm



CN-7744



31 Cm

201.5 Cm



CN-7744-A



17 Cm

187 Cm



CN-7745



24 Cm

200 Cm



CN-7981



17 Cm

198 Cm



CN-7982



19.5 Cm

189 Cm



CN-8105



37 Cm

198 Cm



CN-8107



31 Cm

203 Cm



CN-8108



26 Cm

207 Cm



CN-8157



32 Cm

200 Cm



CN-8514



26 Cm

200 Cm



CN-8515



28 Cm

200 Cm



CN-8516



25 Cm

192.5 Cm



CN-8517



16.5 Cm

200 Cm



CN-8518



CN-8519



CN-8520



CN-8521



CN-8522



CN-8523

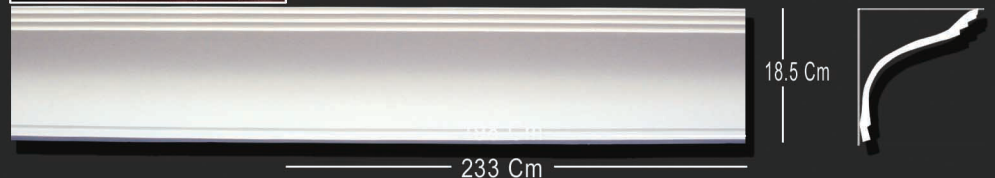

CN-8524



CN-8525



CN-8526



CN-8527



CN-8528



CN-8529



CN-8530



CN-8531

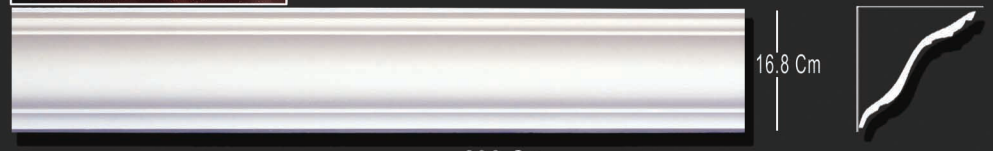

CN-8532



CN-8533



CN-8534



CN-8535



CN-8536

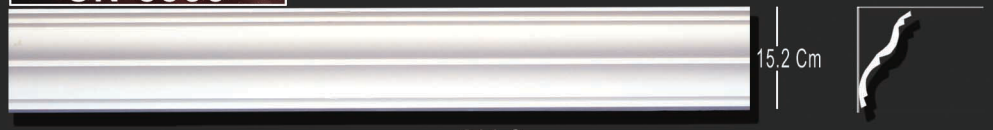

CN-8537



CN-8538



CN-8539



CN-8540



CN-8541



CN-8542

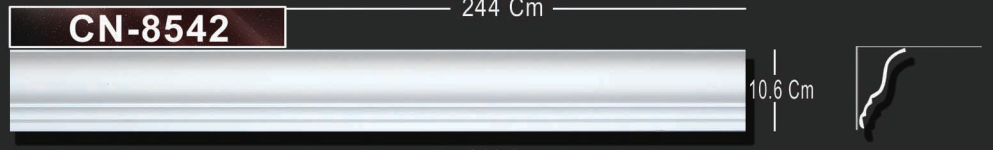

CN-8543

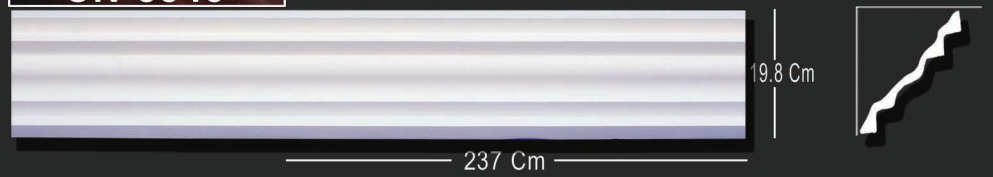

CN-8544



CN-8545



CN-8546



CN-8547



CN-8548



CN-8549



CN-8550



CN-8551



CN-8552



CN-8553



CN-8554



CN-8555



CN-8556



CN-8557



CN-8558



CN-8559



CN-8560



CN-8561



CN-8562



CN-8563



CN-8564



CN-8565



CN-8566



CN-8567



CN-8568



CN-8569



CN-8570



CN-8571



CN-8572



CN-8573



CN-8574



CN-8575



CN-8576



CN-8577



CN-8578



CN-8579



CN-8580



CN-8581



CN-ISLAMIC-2



CN-ISLAMIC-3



CN-ISLAMIC-3-A



CN-ISLAMIC-3-B



CN-ISLAMIC-3-C



CN-ISLAMIC-3-D



CN-ISLAMIC-4



CN-ISLAMIC-5



CN-ISLAMIC-7



CN-ISLAMIC-9



CN-ISLAMIC-10

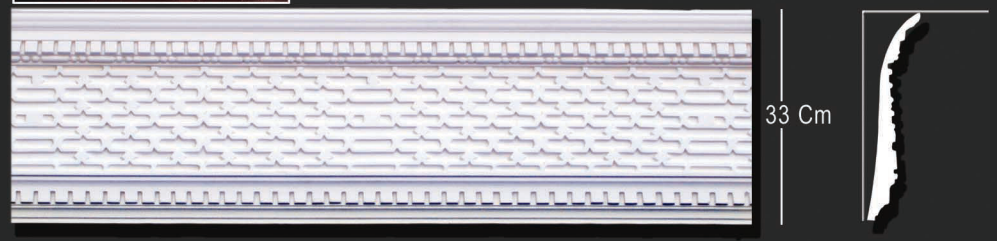

CN-ISLAMIC-12



CN-ISLAMIC-14



CN-ISLAMIC-15



CN-ISLAMIC-16



CN-ISLAMIC-17



CN-ISLAMIC-18



CN-ISLAMIC-19



CN-ISLAMIC-20



CN-ISLAMIC-21

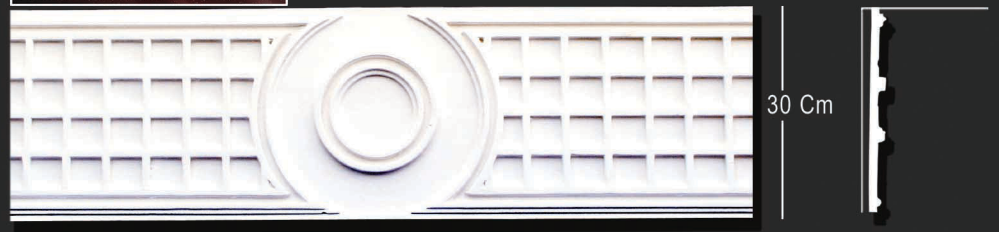

CN-ISLAMIC-102



CN-ISLAMIC-103



CN-ISLAMIC-104



MOROCO-1



CN-MOROCO-2



CN-MOROCO-3



CN-MOROCO-4



CN-MOROCO-4-A



CN-MOROCO-5



CN-MOROCO-6



CN-MOROCO-7



CN-MOROCO-7-A



CN-MOROCO-8



CN-MOROCO-8-A



CN-MOROCO-9



CN-MOROCO-9-A

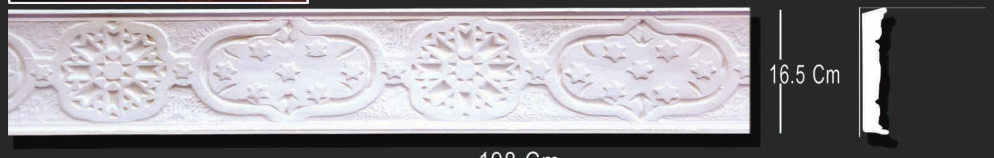

CN-MOROCO-10



CN-MOROCO-10-A



CN-MOROCO-13



CN-MOROCO-14



CN-MOROCO-15



CN-MOROCO-16



CN-SPANISH-1



CN-SPANISH-2



CN-SPANISH-3



CN-SPANISH-3-A



CN-SPANISH-4



CN-SPANISH-5

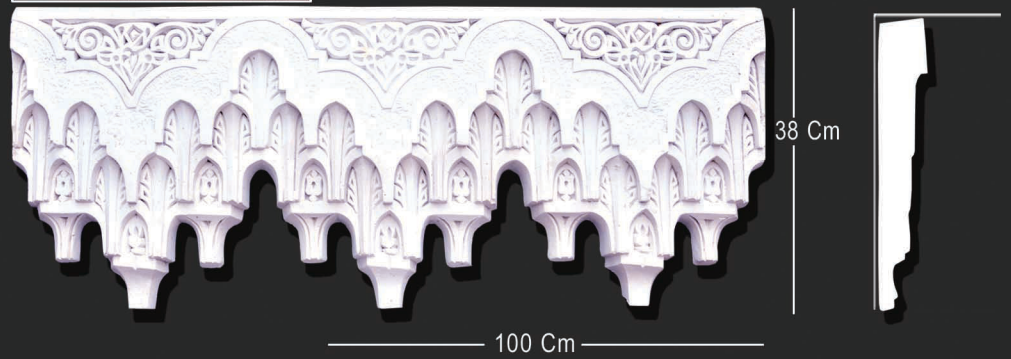

CN-BORDINE



CN-KORTUBA



CN-TUNISIA



BN.AB.1



12 Cm

166.5 Cm

BN-ARCH-3



15 Cm

137 Cm

BN-ARCH-3-A



12.5 Cm

136.5 Cm

BN-9-CM



9 Cm

153 Cm

BN-94



9.5 Cm

150 Cm

BN-94-A



8 Cm

160 Cm

BN-95



6 Cm

145.5 Cm

BN-96

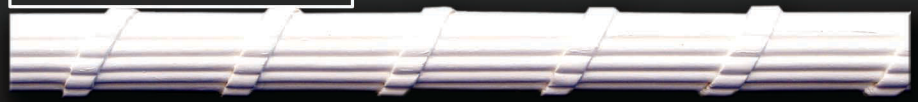

6.5 Cm

159.5 Cm

BN-100



10 Cm

148 Cm

BN-1023



10 Cm

171 Cm

BN-1023-A



12.5Cm

146 Cm

BN-1153



5 Cm

158.5 Cm

BN-1211



2.5 Cm

158.5 Cm

BN-2014



10 Cm

161 Cm

BN-2100



9 Cm

150 Cm

BN-3102



7.5 Cm

156.5 Cm

BN-3118



11.5Cm

145.5 Cm

BN-3121



8 Cm

144.5 Cm

BN-3124



8 Cm

154 Cm

BN-3125



10 Cm

161.5 Cm

BN-3126



8 Cm

144.5 Cm

BN-3127



10 Cm

150 Cm

BN-3128

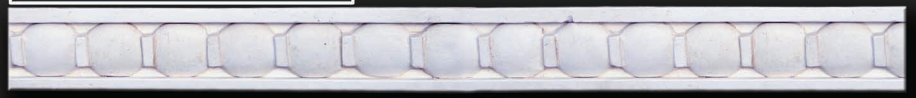

6 Cm

160 Cm

BN-3190



5 Cm

165 Cm

BN-3191



6 Cm

160 Cm

BN-3192



6 Cm

160 Cm

BN-4100



8.5 Cm

129.5 Cm

BN-4105



9.5 Cm

107 Cm

BN-4106



5.5 Cm

107 Cm

BN-4107



5 Cm

150.5 Cm

BN-4109



10 Cm

166 Cm

BN-4110



15 Cm

121 Cm

BN-4112



10 Cm

123 Cm

BN-4113



17 Cm

150 Cm

BN-4114



9 Cm

157 Cm

BN-4116



15 Cm

142 Cm

BN-4117



12 Cm

150 Cm

BN-4118



10 Cm

150 Cm

BN-4119



15 Cm

107 Cm

BN-4120



10 Cm

145 Cm

BN-4121



13.5 Cm

100 Cm

BN-4122



13.5 Cm

136 Cm

BN-4123



15 Cm

128 Cm

BN-4488



10 Cm

175 Cm

BN-5142



3 Cm

159.5 Cm

BN-5145



3 Cm

155 Cm

BN-5246



5.5 Cm

161.5 Cm

BN-5249



5.5 Cm

195 Cm

BN-5265



5 Cm

156 Cm

BN-5266



8 Cm

166 Cm

BN-5267



8 Cm

146 Cm

BN-5404



4.5 Cm

160 Cm

BN-5615



20 Cm

159.5 Cm

BN-5666



7 Cm

165.5 Cm

BN-5706



3 Cm

100 Cm

BN-5783



5.5 Cm

161.5 Cm

BN-5983



10 Cm

134 Cm

BN-5987



10.5 Cm

164.5 Cm

BN-5988



14.Cm

154.5 Cm

BN-5988-A



7.5 Cm

154.5 Cm

BN-5989



8 Cm

157 Cm

BN-6001



4 Cm

158 Cm

BN-6005



4.5 Cm

159.5 Cm

BN-6006



4 Cm

160 Cm

BN-6007



7 Cm

158.5 Cm

BN-6008



5 Cm

158.5 Cm

BN-6037



11 Cm

165.5 Cm

BN-6051



5 Cm

149 Cm

BN-6053-A



3 Cm

157.5 Cm

BN-6053-B



13.5 Cm

145.5 Cm

BN-6054

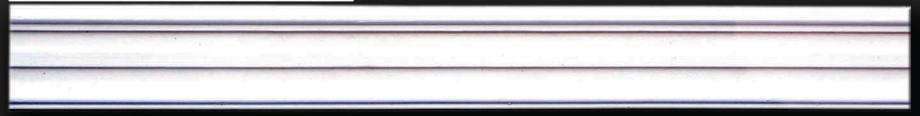

10 Cm

159 Cm

BN-6057



4.5Cm

146.5 Cm

BN-6145



9.5 Cm

125 Cm

BN-6157



11 Cm

150 Cm

BN-6171



BN-6176



BN-6176-A



BN-6177



BN-6268



BN-6285



BN-6432



BN-6433



BN-6757

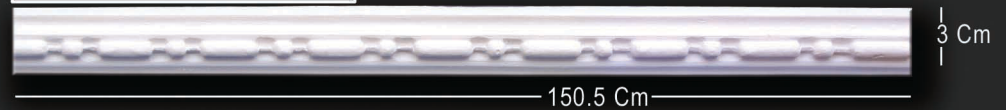

BN-6758



BN-6987

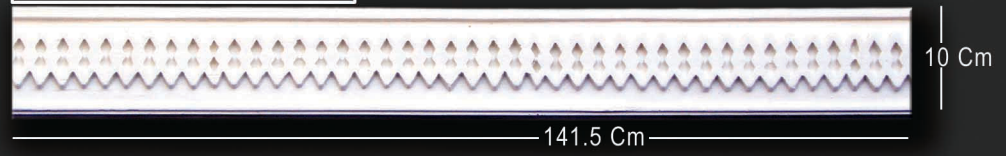

BN-7062

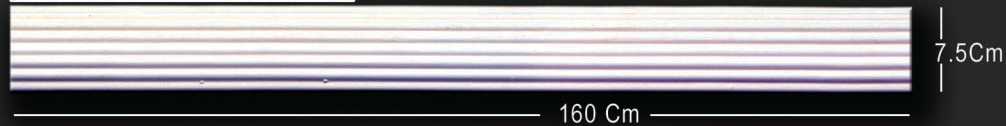

BN-7085



BN-7086



7 Cm

128 Cm

BN-7105



6 Cm

132 Cm

BN-7205



5 Cm

160 Cm

BN-7254



5.5 Cm

160 Cm

BN-7280



6 Cm

158 Cm

BN-7282



5.5 Cm

159 Cm

BN-7283



7 Cm

164.5 Cm

BN-7284



6 Cm

154 Cm

BN-7285



4 Cm

160 Cm

BN-7406



5 Cm

158.5 Cm

BN-7407



6 Cm

160 Cm

BN-7504



9.5Cm

160 Cm

BN-7505



4 Cm

155.5 Cm

BN-7506



5 Cm

155 Cm

BN-7507



6 Cm

160 Cm

BN-7508



5 Cm

152.5 Cm

BN-7509



8 Cm

150 Cm

BN-7744



6.5 Cm

156 Cm

BN-8000



8 Cm

165 Cm

BN-8001



10 Cm

155.5 Cm

BN-8002



7 Cm

150 Cm

BN-8003



13.5Cm

100 Cm

BN-8004



13.5Cm

138 Cm

BN-8005



15 Cm

128 Cm

BN-ISLAMIC-2



12 Cm

151.5 Cm

BN-ISLAMIC-3



8 Cm

141 Cm

BN-ISLAMIC-4



4.5Cm

159.5 Cm

BN-ISLAMIC-5



6.5 Cm

129.5 Cm

BN-ISLAMIC-6



13 Cm

157 Cm

BN-ISLAMIC-12



9 Cm

159.5 Cm

BN-ISLAMIC-A



7 Cm

154 Cm

BN-ISLAMIC-B



12 Cm

167.5 Cm

BN-ISLAMIC-C



11 Cm

169.5 Cm

BN-ISLAMIC-E



8 Cm

156 Cm

BN-MOROCO-1



12 Cm

140 Cm

BN-MOROCO-2



11.5Cm

141 Cm

BN-MOROCO-13



10 Cm

159.5 Cm

FR.1



40 Cm

FR.64



30 X 55 Cm

FR.130



122 Cm

FR.167



167 Cm

FR.2



46 X 55 Cm

FR.85



44 X 52 Cm

FR.166



43 Cm

FR.170



94 X 118 Cm

Flowers

بحرات

FR.171



211 Cm

FR.172



230 Cm

FR.174



140 Cm

FR.174-B



140 Cm

FR.171-A



54 Cm

FR.173



140 Cm

FR.174-A



60 Cm

FR.175



230 Cm

Flowers

بحرات

FR.175-A



230 Cm

FR.177



109 Cm

FR.BASKET-181



180 Cm

FR.207



45 Cm

FR.175-B



140 Cm

FR.BASKET-180



35 X 70 Cm

FR.199

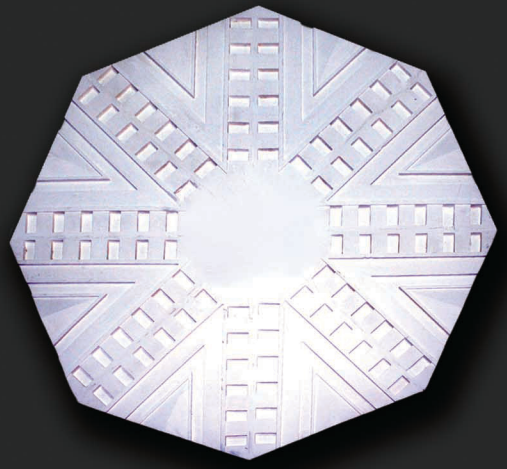

167 Cm

FR.1170



66 Cm

Flowers

بحرات

FR.1172



68 Cm

FR.1212



48 Cm

FR.1218



65 Cm

FR.1516



60 Cm

FR.1172-B



29 Cm

FR.1214



60 Cm

FR.1224



70 Cm

FR.2003



60 Cm

Flowers

بحرات

FR.2003-A



56 Cm

FR.2004-A



38 Cm

FR.2014-A



42 Cm

FR.2100-A



48 Cm

FR.2004



66 Cm

FR.2014



80 Cm

FR.2100



81 Cm

FR.2101



80 Cm

Flowers

بحرات

FR.2101-A



48 Cm

FR.2102-A



40 Cm

FR.3006-A



53 Cm

FR.3102



80 Cm

FR.2102



80 Cm

FR.3006



93 Cm

FR.3101



81 Cm

FR.3102-A



50 Cm

Flowers

بحرات

FR.3118



90 Cm

FR.3120



61 Cm

FR.3121-A



44 Cm

FR.3125



75 Cm

FR.3118-A



51.5 Cm

FR.3121



80 Cm

FR.3122



119 Cm

FR.3125-A



42 Cm

Flowers

بحرات

FR.3126



72 Cm

FR.3133



80 Cm

FR.3135



83 Cm

FR.3137



103 Cm

FR.3126-A



40 Cm

FR.3134



95 Cm

FR.3136



86.5 Cm

FR.3138



65 Cm

Flowers

بحرات

FR.3139



69 Cm

FR.3141



51 Cm

FR.3143



99 Cm

FR.3146



100 Cm

FR.3140



36.5 Cm

FR.3142



42 Cm

FR.3145



100 Cm

FR.3147



160 Cm

Flowers

بحرات

FR.3148



100 Cm

FR.3150



50 Cm

FR.3152



67.5 Cm

FR.3154



350 Cm

FR.3149



50 Cm

FR.3151



50 Cm

FR.3153



200 Cm

FR.3155



200 Cm

Flowers

بحرات

FR.3153



80 Cm

FR.4100



80 Cm

FR.4208



68 Cm

FR.4488



70 Cm

FR.3191

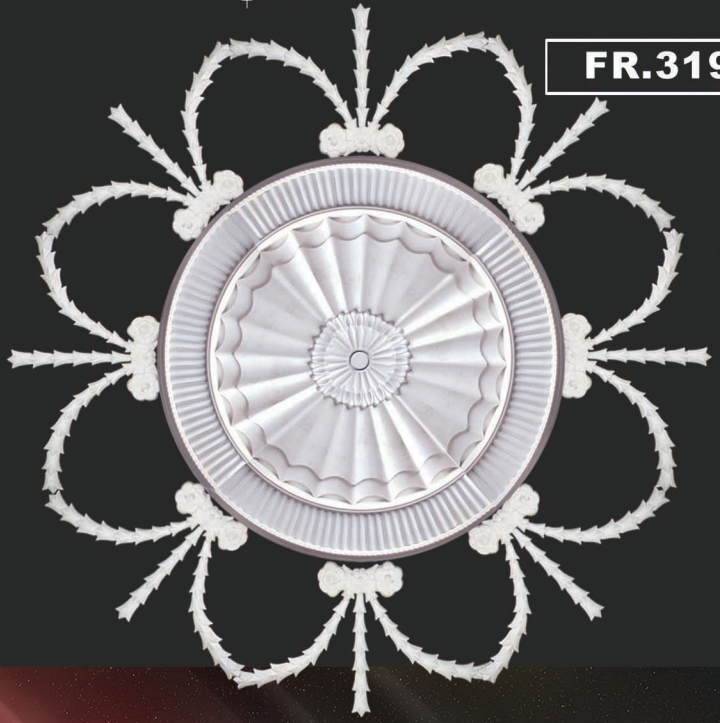

300 Cm

FR.4100-A



50 Cm

FR.4108-A



54 Cm

FR.4532



78 Cm

Flowers

بحرات

FR.5155



33 Cm

FR.5157



75 Cm

FR.5167



52 Cm

FR.5171



36.5 Cm

FR.5156



55 Cm

FR.5166



38 Cm

FR.5168



50 Cm

FR.5172



47 Cm

Flowers

بحرات

FR.5173



66 Cm

FR.5246



63 Cm

FR.5248



69 Cm

FR.5249-A



50 Cm

FR.5244



65 Cm

FR.5247



66 Cm

FR.5249



79 Cm

FR.5255



103 Cm

FR.5265



42 Cm

FR.5301



50 Cm

FR.5396



73 Cm

FR.5403-A



78 Cm

FR.5266



58 Cm

FR.5302



58 Cm

FR.5396-A



62 Cm

FR.5404



85 Cm

Flowers

بحرات

FR.5405



107 Cm

FR.5503



29X36 Cm

FR.5279



61X45.5 Cm

FR.5666



80 Cm

FR.5470



60 Cm

FR.5570



52 Cm

FR.5607



68 Cm

FR.5666-A



40 Cm

Flowers

بحرات

FR.5844



63 Cm

FR.5866



77 Cm

FR.5987



71 Cm

FR.6024



89X119 Cm

FR.5860



32 Cm

FR.5897



50 Cm

FR.5988



80 Cm

FR.6025



110X155 Cm

Flowers

بحرات

FR.6025-A



77X55 Cm

FR.6041



45 Cm

FR.6051



55.5 Cm

FR.6052-A



34X25 Cm

FR.6038



42X79 Cm

FR.6042



40X72 Cm

FR.6052



64X81 Cm

FR.6052-B



57 Cm

Flowers

بحرات

FR.6056



58 Cm

FR.6057



67 Cm

FR.6145



50 Cm

FR.6172



116 Cm

FR.6056-A



47 Cm

FR.6062



45X67 Cm

FR.6171



68 Cm

FR.6636



55.5X88 Cm

Flowers

بحرات

FR.6693



100X65 Cm

FR.6823



140X96 Cm

FR.6835



95X80 Cm

FR.7158



51X39 Cm

FR.6822



184X108 Cm

FR.6825



108X73 Cm

FR.6838



93X70 Cm

FR.7185



32.5 Cm

Flowers

بحرات

FR.7203



65 Cm

FR.7243



105X105 Cm

FR.7518



60 Cm

FR.7520



60 Cm

FR.7242



79X79 Cm

FR.7481



50 Cm

FR.7519



60 Cm

FR.7660



37 Cm

Flowers

بحرات

FR.7661



85 Cm

FR.7665-A



41 Cm

FR.7671



88 Cm

FR.7681



83 Cm

FR.7685



102X46 Cm

FR.7665



69 Cm

FR.7666



86 Cm

FR.7675



117 Cm

Flowers

بحرات

FR.7742



48 Cm

FR.7744-A



55 Cm

FR.7935



79 Cm

FR.7937-A



52 Cm

FR.7744



79 Cm

FR.7745



95X70 Cm

FR.7935-A



51.5 Cm

FR.8000



71 Cm

Flowers

بحرات

FR.8000-A



61 Cm

FR.8001-A



66 Cm

FR.8102



92 Cm

FR.8106



76 Cm

FR.8001



95 Cm

FR.8101



52 Cm

FR.8105



83 Cm

FR.8106-A



53 Cm

Flowers

بحرات

FR.8107



83 Cm

FR.8602



100 Cm

FR.8604



79 Cm

FR.8606



81X58 Cm

FR.8607



52 Cm

FR.8601



80 Cm

FR.8603



84 Cm

FR.8605



80X78 Cm

FR.8608



66 Cm

Flowers

بحرات

FR.MINI-1



8 Cm

FR.MINI-2



10 Cm

FR.MINI-3



9 Cm

FR.MINI-4



10 Cm

FR.MINI-5



16 Cm

FR.MINI-6



26 Cm

FR.MINI-7



22 Cm

FR.MINI-8



23 Cm

FR.MINI-9



26 Cm

FR.MINI-10



23 Cm

FR.MINI-11



10 Cm

FR.MINI-11-A



19 Cm

FR.MINI-12



19X19 Cm

FR.MINI-13



20X20 Cm

FR.MINI-14

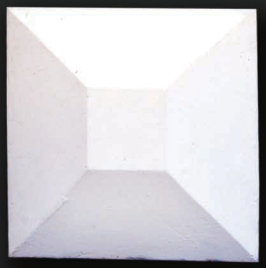

20X20 Cm

FR.MINI-15



36.5X36.5 Cm

Flowers

بحرات

FR.MINI-16



21 Cm

FR.ISLAMIC-3



70 Cm

FR.ISLAMIC-4-B



52 Cm

FR.ISLAMIC-10

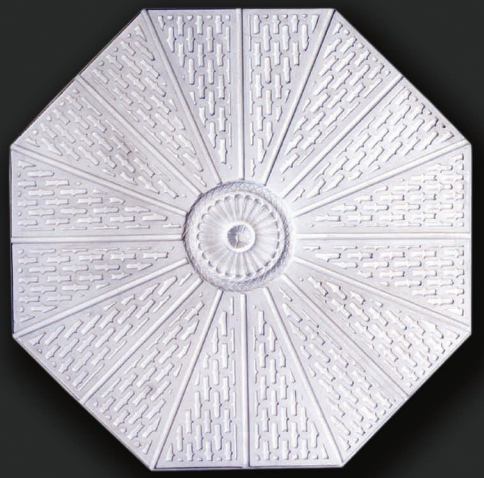

110 Cm

FR.MINI-1101



19 Cm

FR.ISLAMIC-6



50 Cm

FR.ISLAMIC-4-A



70 Cm

FR.ISLAMIC-12



81 Cm

FR.MINI-7008



13.5 Cm

FR.ISLAMIC-10-A



65 Cm

Flowers

بحرات

FR.ISLAMIC-12-A



40 Cm

FR.MOROCO-1



109 Cm

FR.MOROCO-13



94 Cm

FR.MOROCO-14



14 Cm

FR.ISLAMIC-100



63 Cm

FR.MOROCO-2



65 Cm

FR.MOROCO-13-A



61 Cm

FR.MOROCO-15



80 Cm

FR.MOROCO-16



104 Cm

FR.7244



72X72 Cm

FR.STAR-7



68 Cm

FR.STAR-8-A



35 Cm

FR.MOROCO-17



159 Cm

FR.STAR-6



61 Cm

FR.STAR-8



96 Cm

FR.STAR-4103



100.5 Cm

Flowers

بحرات

FR.STAR-7284



40 Cm

FR.STAR-B



96 Cm

FR.STAR-D



100 Cm

FR.STAR-G



100 Cm

FR.STAR-A



124 Cm

FR.STAR-C



135 Cm

FR.STAR-E



64 Cm

FR.8609



70 Cm

Flowers

بحرات

CR-95



CR-2014

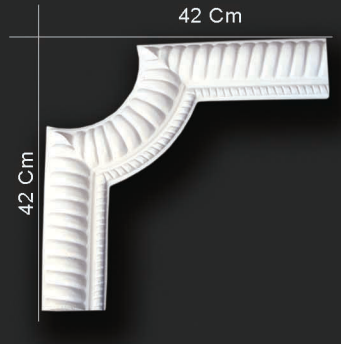

CR-2118

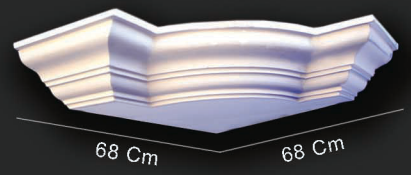

CR-3102

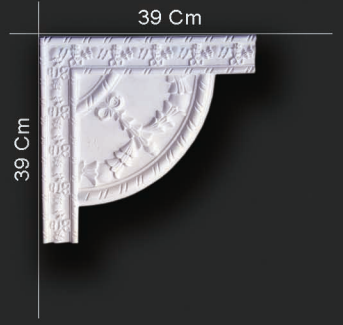

CR-96



CR-2100

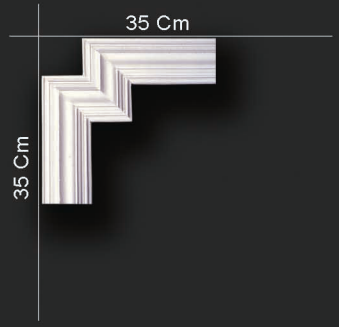

CR-2119



CR-3103

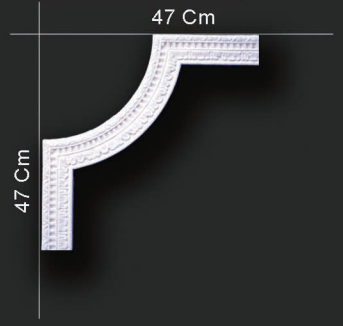

CR-1153

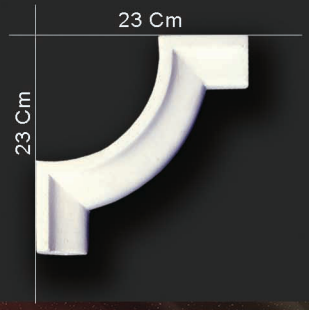

CR-2101

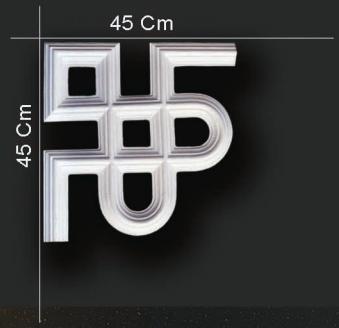

CR-2177

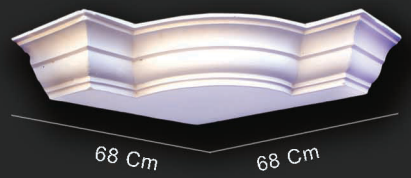

CR-3118

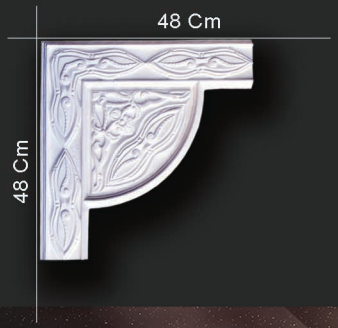

Corners

زوايا

CR-3121



CR-3134

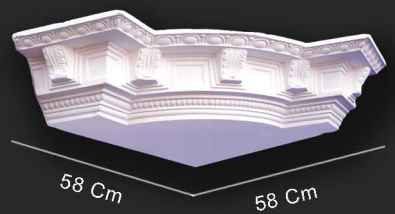

CR-3137

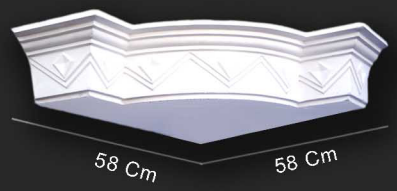

CR-3140

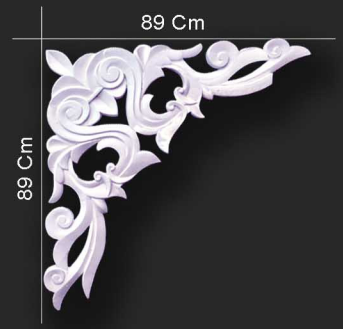

CR-3125

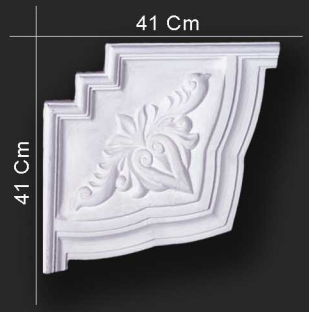

CR-3135



CR-3138



CR-3141

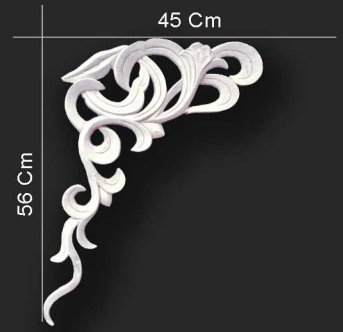

CR-3126

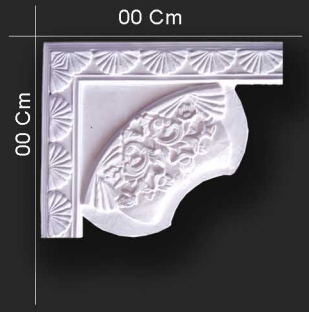

CR-3136



CR-3139

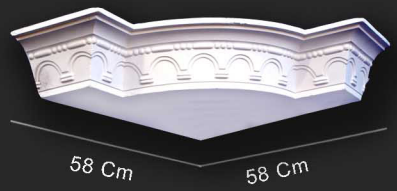

CR-3190

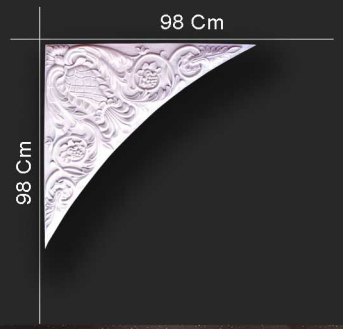

Corners

زوايا

CR-3191



CR-3194



CR-4113

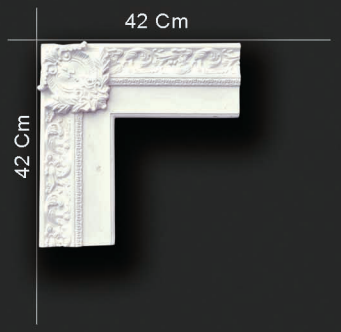

CR-5249

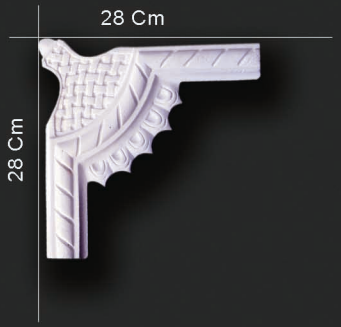

CR-3192

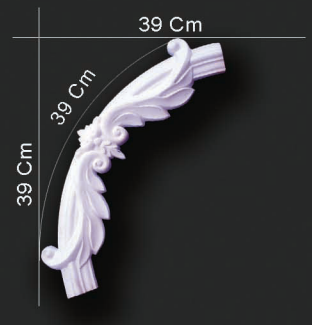

CR-3202

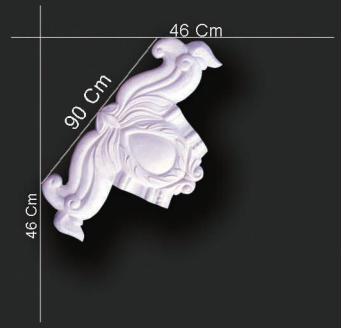

CR-4488

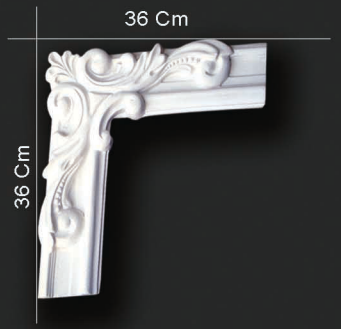

CR-5266

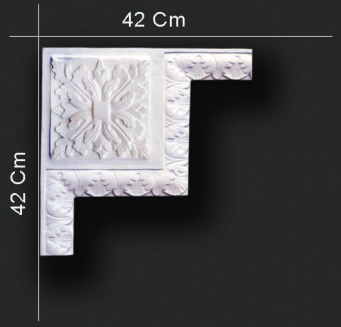

CR-3193



CR-3202-C

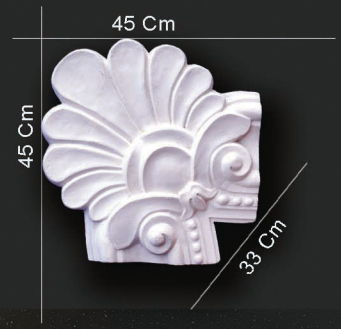

CR-5196

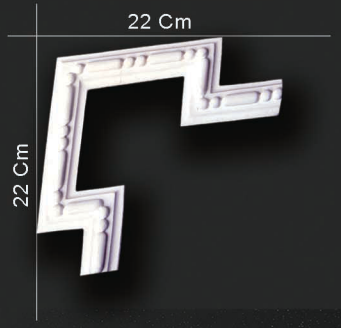

CR-5375

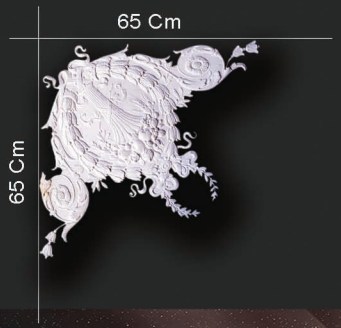

Corners

زوايا

CR-5404



CR-5608-A

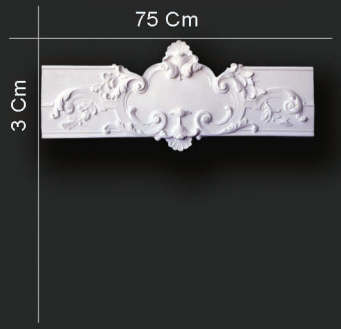

CR-5783

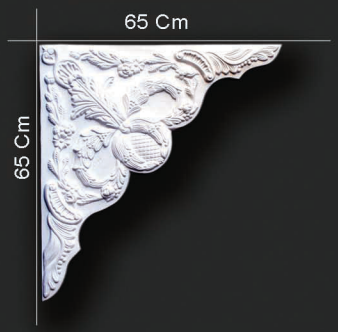

CR-5989



CR-5607



CR-5621

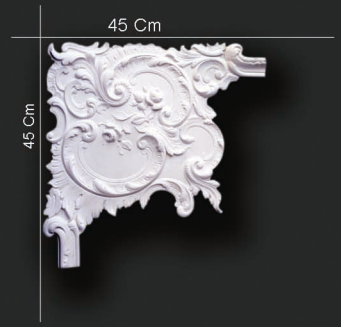

CR-5785

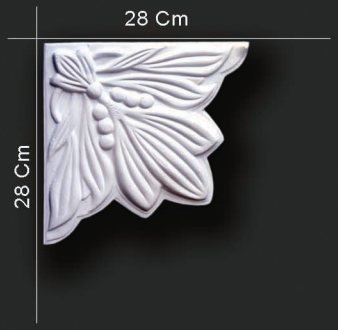

CR-5990

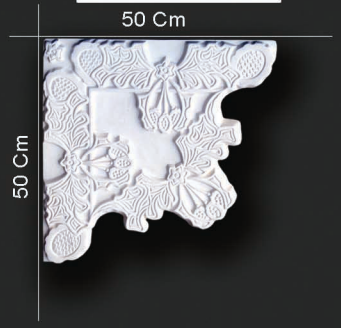

CR-5608

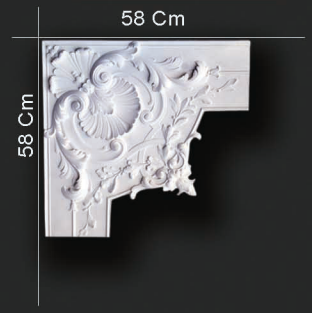

CR-5666

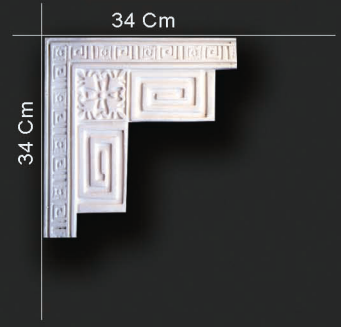

CR-5987

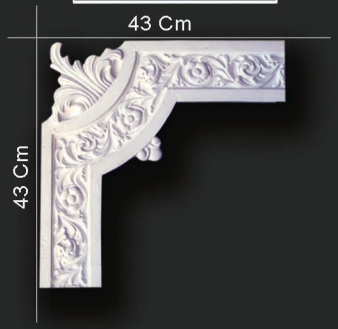

CR-6005

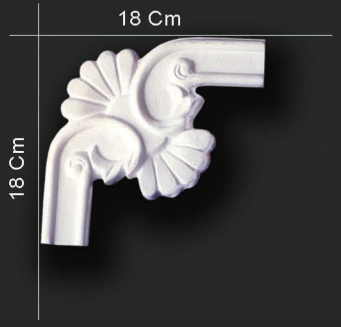

Corners

زوايا

CR-6006



CR-6051



CR-6054-A

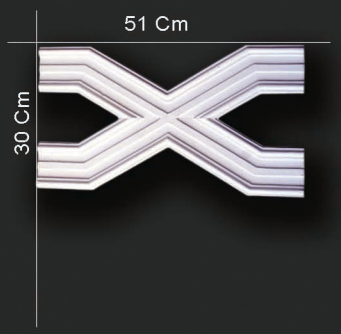

CR-6145

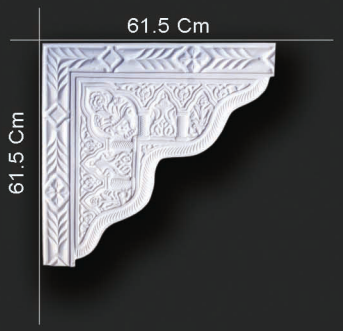

CR-6006-A

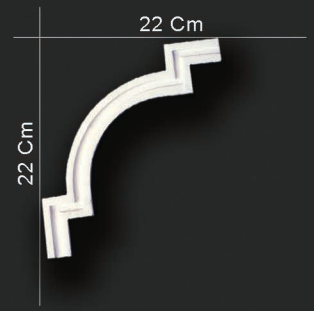

CR-6053

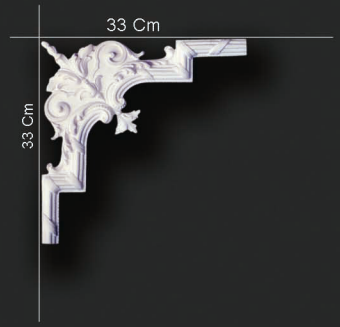

CR-6057

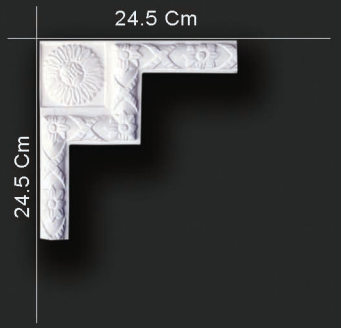

CR-6171

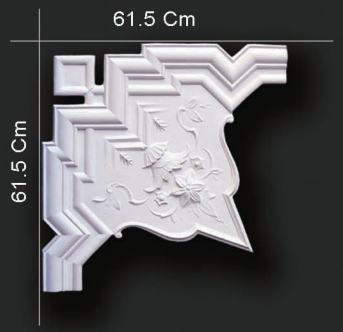

CR-6008

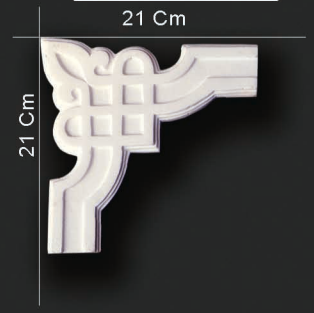

CR-6054

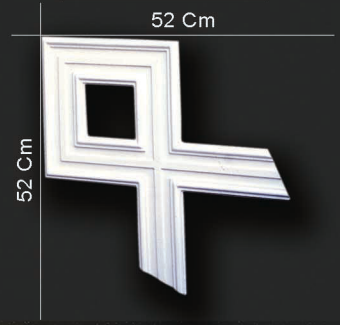

CR-6070

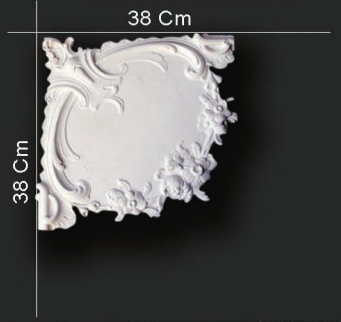

CR-6171-A



CR-6171-B

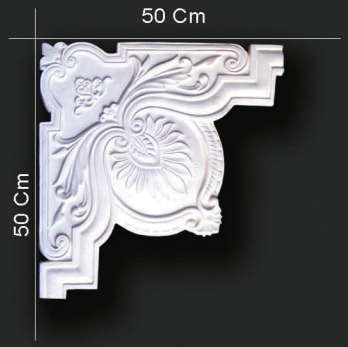

CR-6431



CR-6433

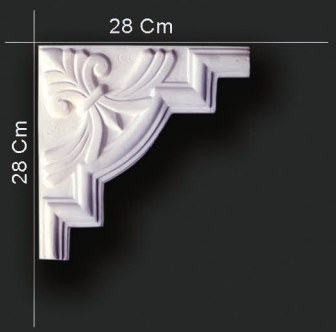

CR-6929

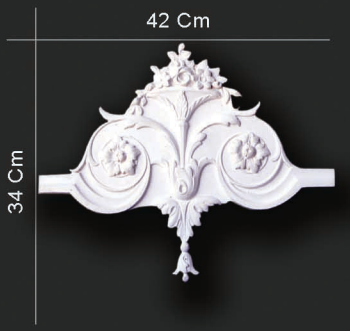

CR-6180

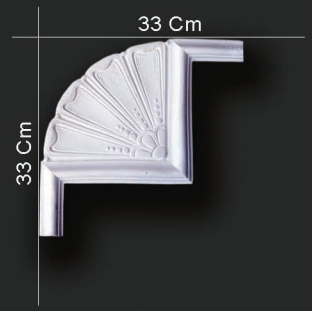

CR-6431-A

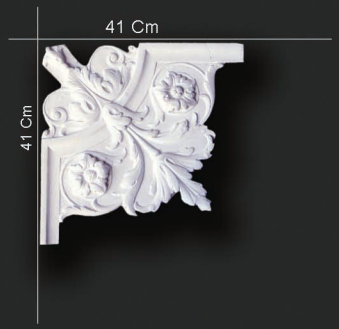

CR-6434

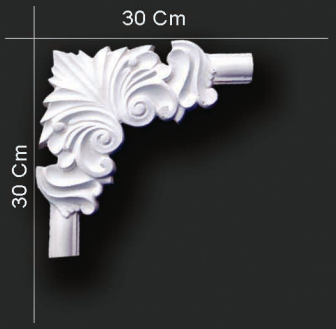

CR-6945

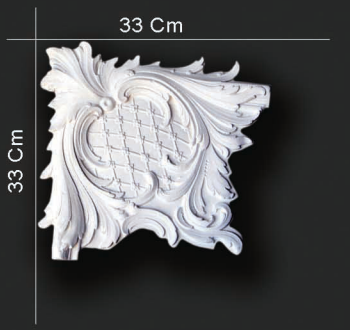

CR-6185



CR-6432

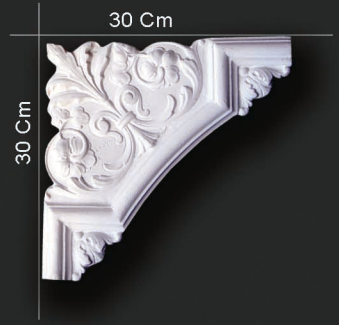

CR-6778

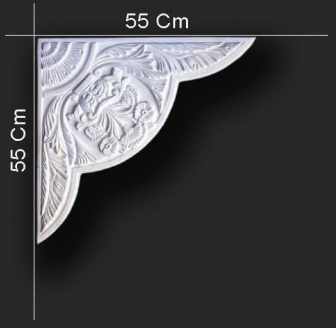

CR-6945-A

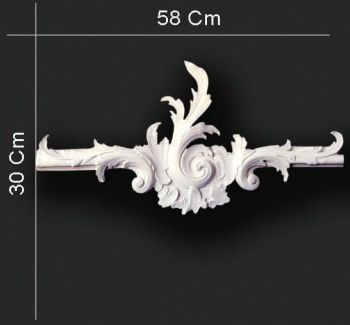

Corners

زوايا

CR-6987

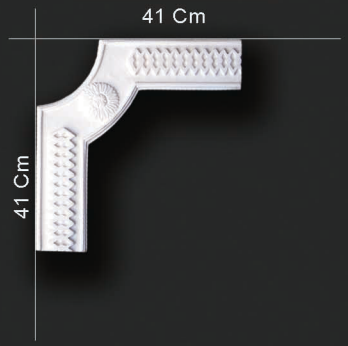

CR-7165-A



CR-7254-B

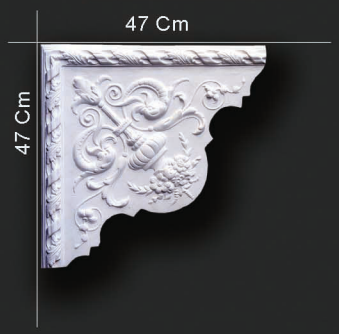

CR-7255

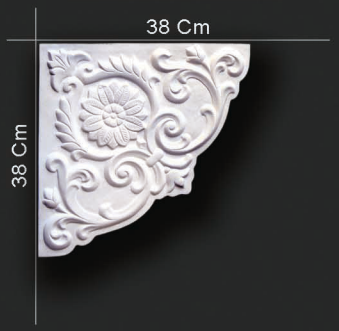

CR-7008

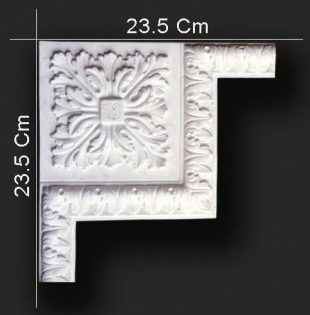

CR-7253

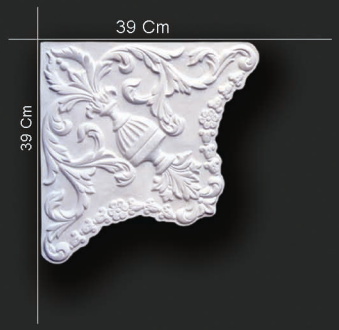

CR-7254-C

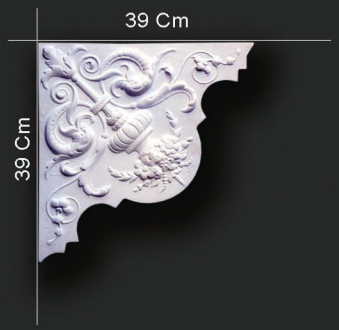

CR-7270

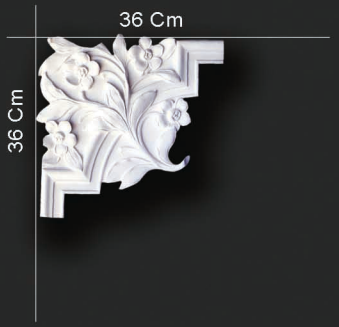

CR-7165

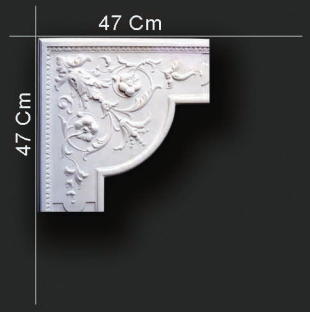

CR-7254-A

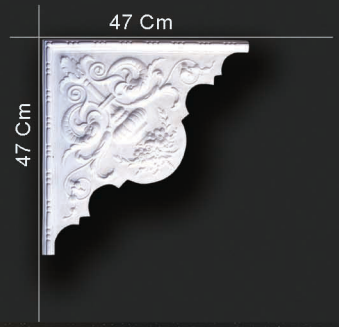

CR-7254-D



CR-7279



Corners

زوايا

CR-7279-A



CR-7283

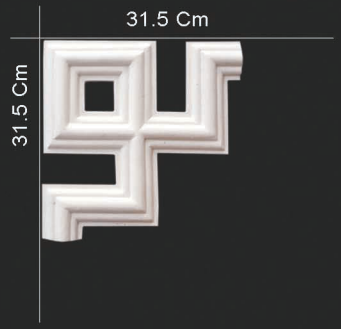

CR-7298

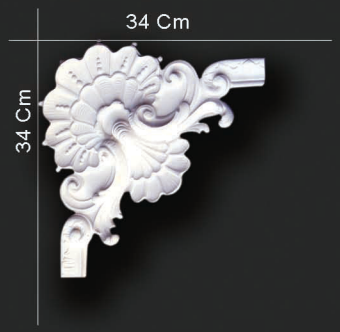

CR-7504



CR-7280



CR-7284

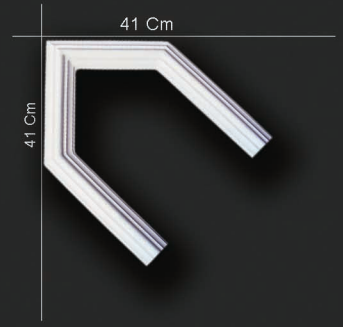

CR-7406



CR-7505

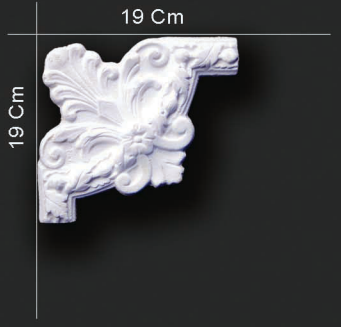

CR-7282

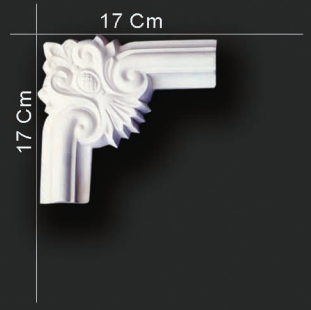

CR-7285



CR-7407

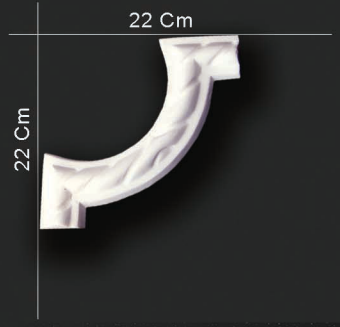

CR-7505-A

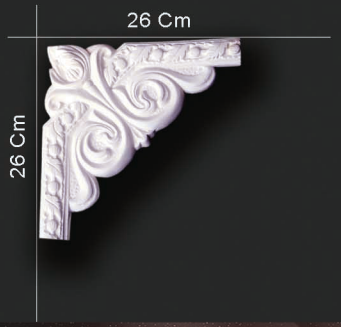

Corners

زوايا

CR-7507

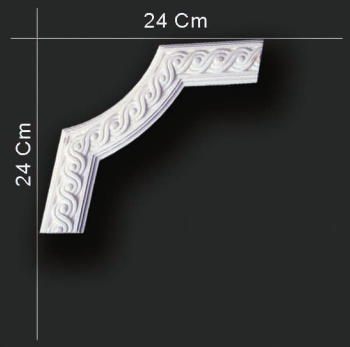

CR-7557

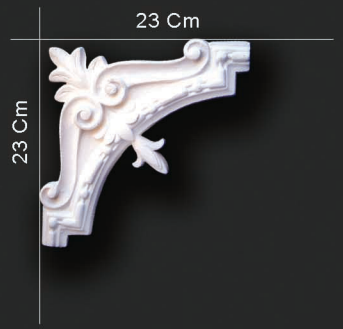

CR-8105

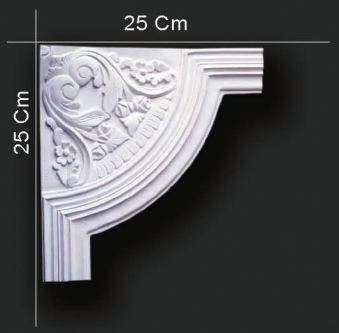

CR-8516

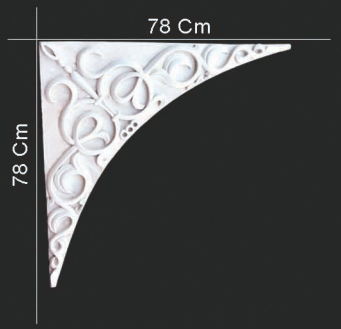

CR-7507-A



CR-7744

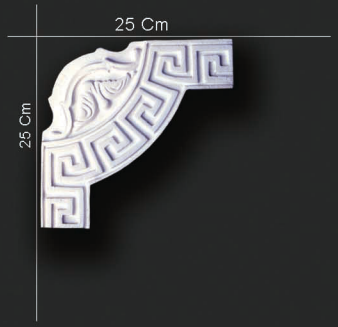

CR-8107

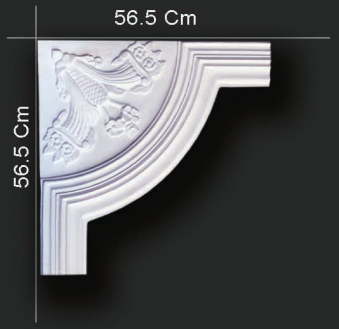

CR-8517

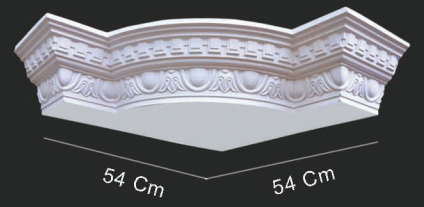

CR-7508

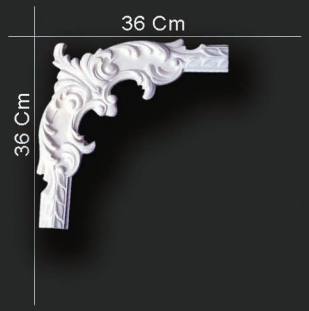

CR-7988

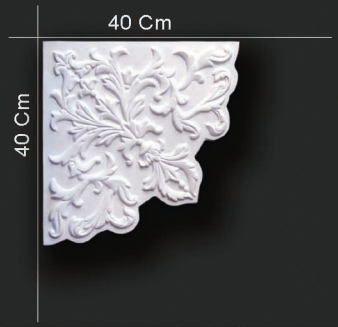

CR-8515

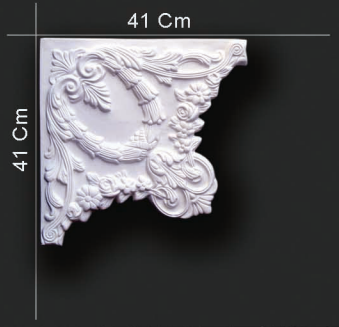

CR-8518

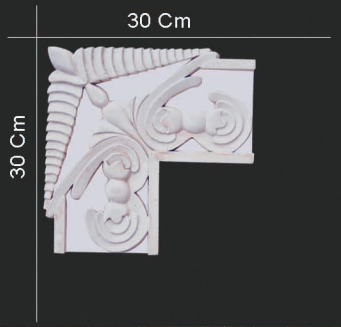

Corners

زوايا

CR-8519



CR-ISLAMIC-12

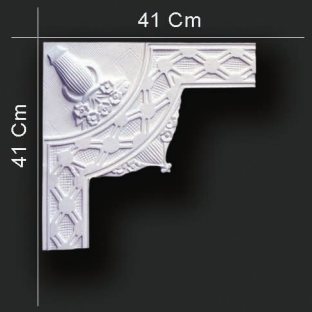

CR-MOROCO-13

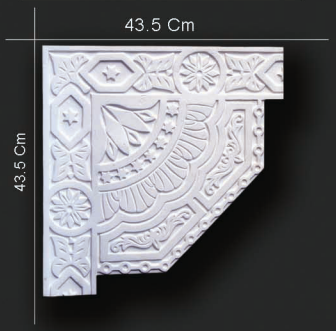

CR-ISLAMIC-2

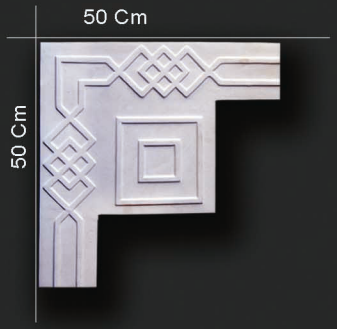

CR-MOROCO-1

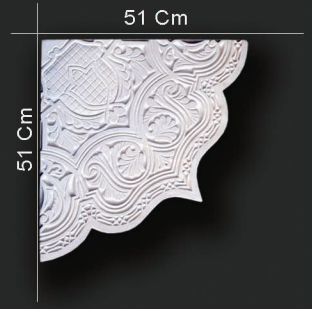

CR-STAR-2

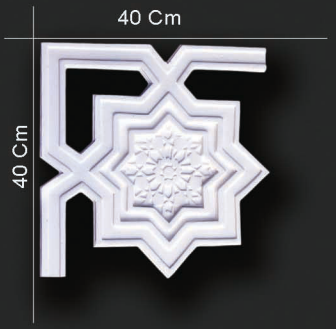

CR-ISLAMIC-4



CR-MOROCO-4

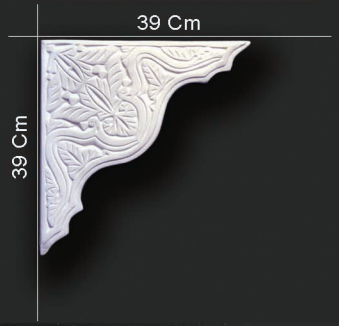

BS-1

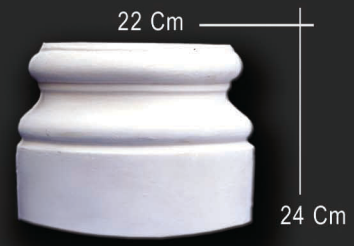

BS-5

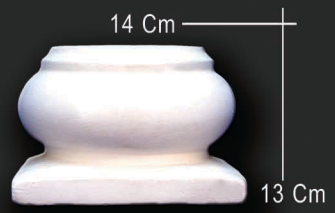

BS-8

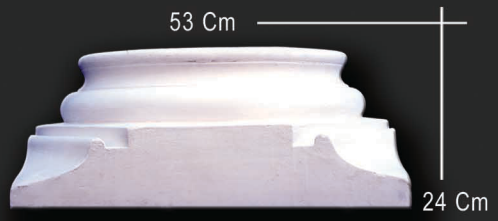

BS-11

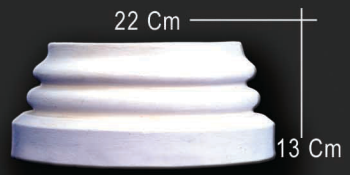

BS-2

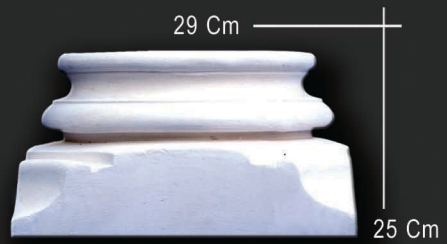

BS-6



BS-9



BS-12



BS-4

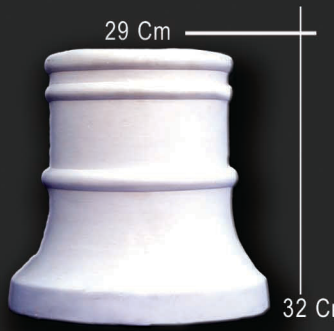

BS-7

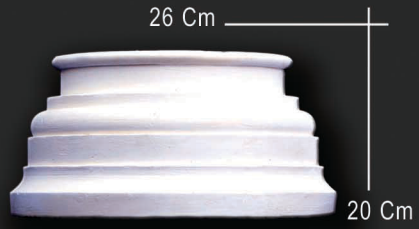

BS-10

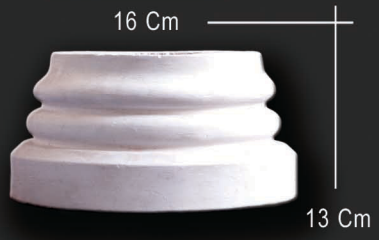

BS-13



Bases

القواعد

BS-14

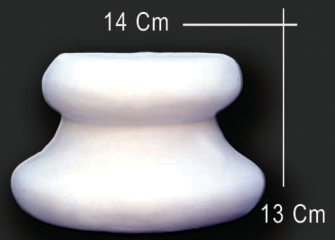

BS-17

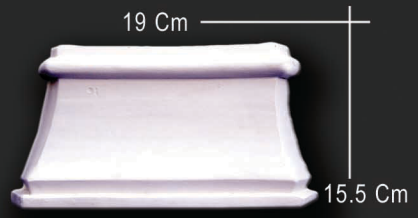

BS-20

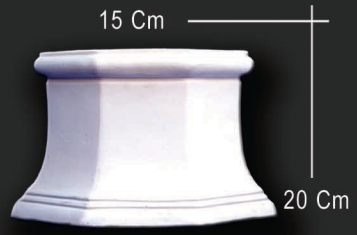

BS-23

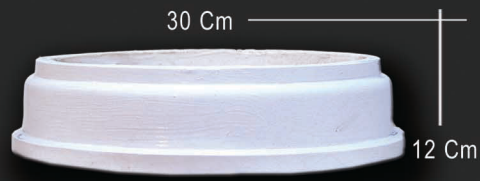

BS-15

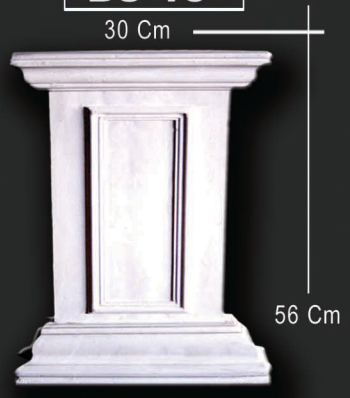

BS-18

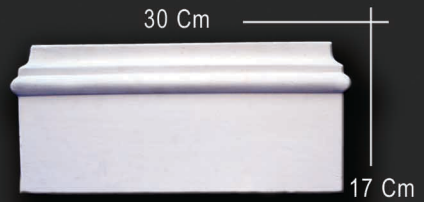

BS-21



BS-38

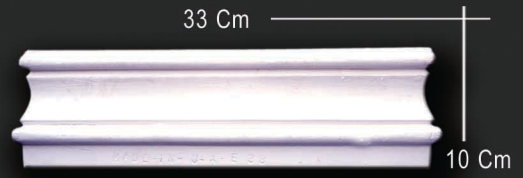

BS-16



BS-19



BS-22



BS-39

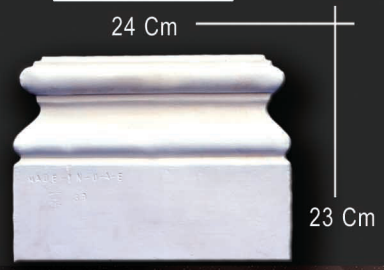

Bases

القواعد

BS-41



BS-44



BS-47



BS-104

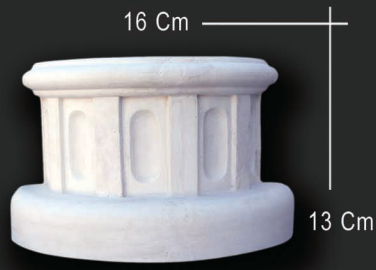

BS-42



BS-45

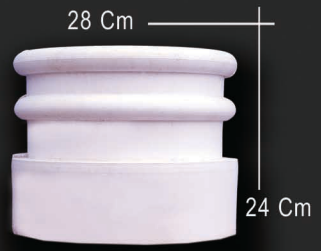

BS-48



BS-43



BS-46



BS-49



Bases

القواعد

CW-1



CW-5



CW-8



CW-11



CW-2



CW-6



CW-9



CW-12



CW-4

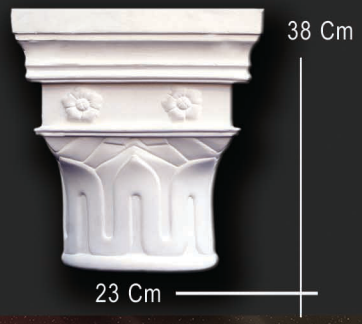

CW-7

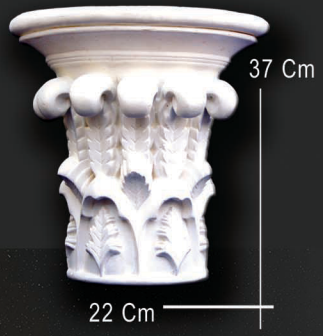

CW-10



CW-13



Crown

تاج

CW-14



CW-17

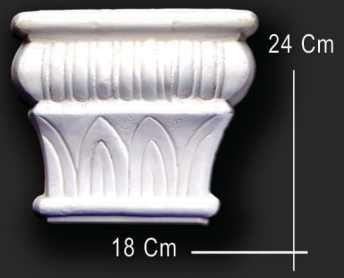

CW-20

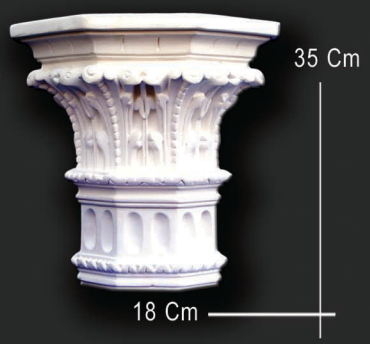

CW-23

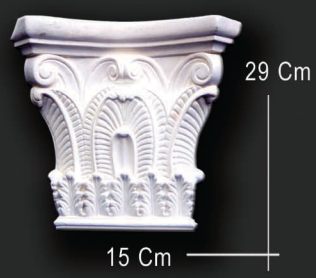

CW-15

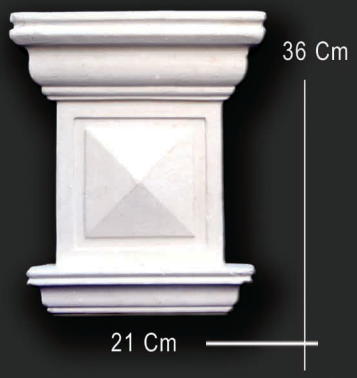

CW-18



CW-21



CW-24



CW-16



CW-19



CW-22



CW-25



Crown

تاج

CW-26



CW-27



CW-28



CW-29



CW-30



CW-31

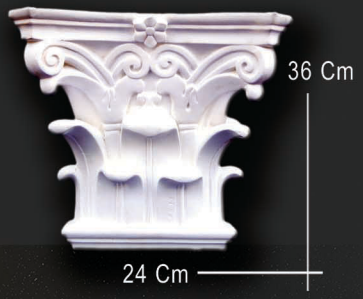

CW-32



CW-34



CW-35



CW-36



CW-38



CW-40



Crown

تاج

CW-41



CW-45



CW-51



CW-54



CW-42



CW-46



CW-52



CW-55



CW-43



CW-50



CW-53



CW-56



Crown

تاج

CW-57



CW-60



CW-102



CW-DECOR-400

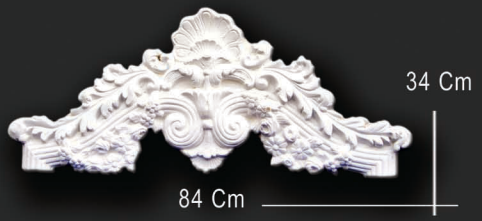

CW-58



CW-61



CW-105



CW-5341



CW-59



CW-101

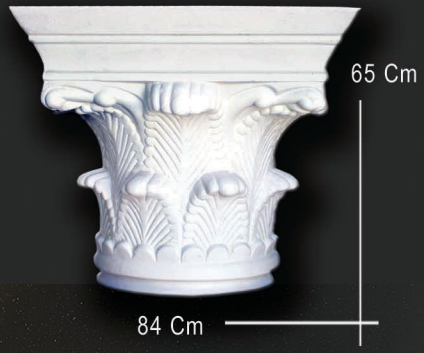

CW-106



CW-5342



Crown

تاج

CW-5343



CW-5345



CW-5344-A



CW-6055

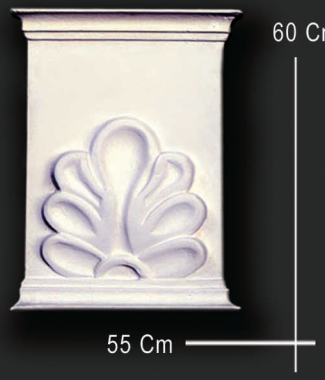

CW-5344





Columns

أعمدة



Columns

أعمدة



Columns

أعمدة



Columns

أعمدة



Columns

أعمدة



Columns

أعمدة

COL-1052



COL-HALF ROUND-BODY:127X19X27 CM-CROWN:19X26 CM-BASE:36X27 CM

COL-1053

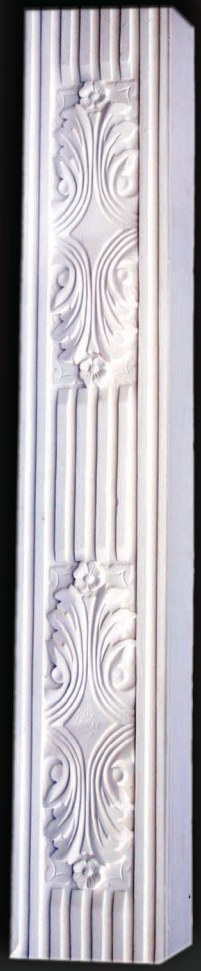

COL- HALF SQIRE-00-BODY:200X23 CM

COL-1054



COL-WIDE -00-BODY:169X27.5 CM

COL-1055



COL-WIDE -00-BODY:150X50 CM

COL-1056



COL-SQUIRE BODY -200X10 CM

COL-1057



COL-SQUIRE BODY -200X14 CM

COL-1058



63 X16 Cm

Columns

أعمدة

COL-1059

105 X11 Cm



COL-1060

COL-ROUND -168X42 CM-BASE42-62X47-CROWN 52-47X42.5

COL-1061

COL-ROUND -100X21 CM-BASE42-22X70-CROWN 46-47X22



BODY ROUND-1

170 X 13 Cm



BODY ROUND-2

185 X 22 Cm



Columns

A.ALKURSI



60 Cm

100 Cm

L.GALALAH



84 Cm

60 Cm

SH.ZAYED PICTURE



119 Cm

95 Cm

A.ALKURSI-2



53 Cm

82 Cm

GALALAH-S



34 Cm

26 Cm

SH.ZAYED PICTURE-R



94 Cm

AL HAMDU



47 Cm

68 Cm

MOHAMMED-S



80 Cm

26 Cm

QABBA-1



88 Cm

98 Cm

Decor

ديكور

QABBA-2



56 Cm

83 Cm

QABBA-3



49 Cm

69 Cm

CURTAIN BOX



58 Cm

108 Cm

TAHSAHUD-1



40 Cm

56 Cm

TAHSAHUD-2



34 Cm

59 Cm

QURAN-1



86 Cm

79 Cm

FLOWER BOARD



80 Cm

60 Cm

DECOR-1215



50 Cm

50 Cm

DECOR-1216



34 Cm

34 Cm

Decor

ديكور

ARCH-1

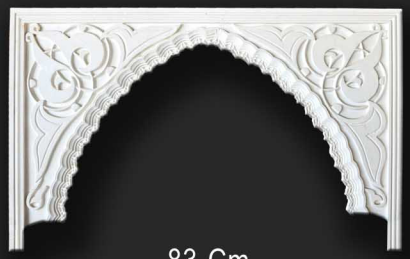

ARCH-4

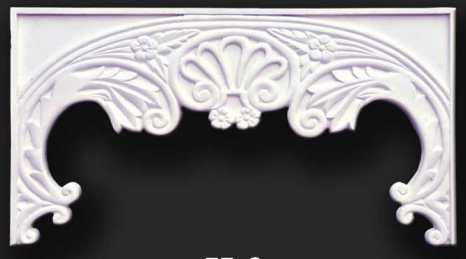

ARCH-7



ARCH-2

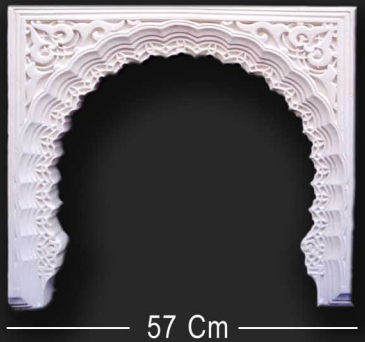

ARCH-5

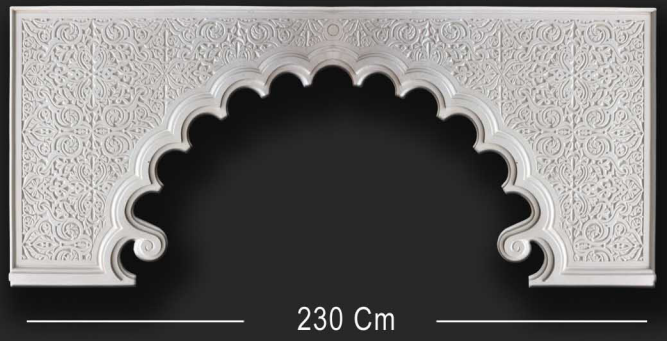

FALCON-2001-A



ARCH-3



ARCH-6



FALCON-2001-B



Decor

ديكور

MIRROR 1 (Base+Frame)



00 Cm

00 Cm

MIRROR-2



87 Cm

66 Cm

FIRE SURROUNDS-A



128 Cm

121 Cm

FIRE SURROUNDS-B



160 Cm

140 Cm

FIRE SURROUNDS-B



125 Cm

180 Cm

BARMAK-70



70 Cm

CANDEL STICK-1



70 Cm

11 Cm

CANDEL STICK-2



70 Cm

11 Cm

COLUMBUS



23.5 Cm

48.5 Cm

BISMILLAH



25 Cm

113 Cm

BISMILLAH-A



45 Cm

21 Cm

Decor

ديكور

BOARD-1213



DECOR-400



DECOR-401



DECOR-400-C

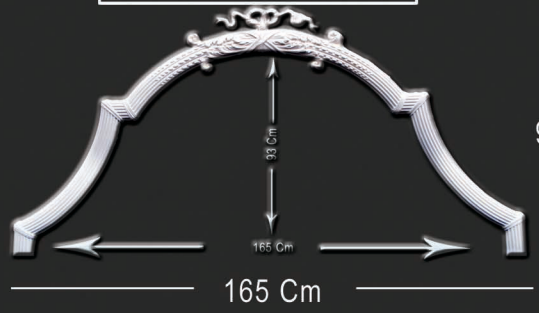

BOARD-1213-A



DECOR-402



DECOR-400-D

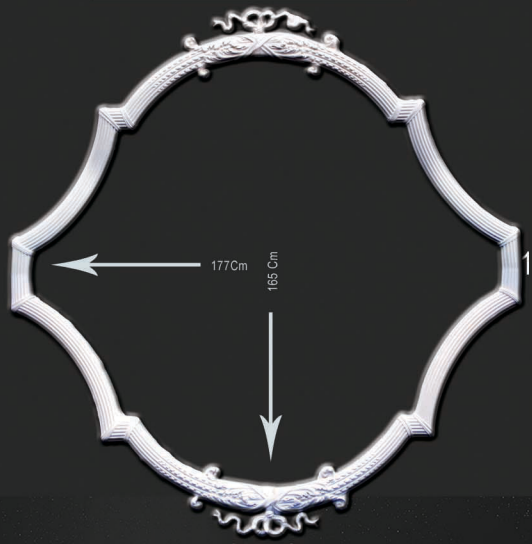

BOARD-1214



DECOR-403



WINDOW ISLAMIC-1

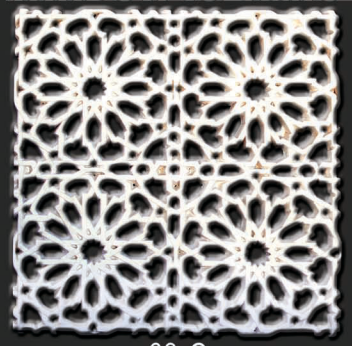

63 Cm

63 Cm

WINDOW -1



55 Cm

28 Cm

WINDOW -2



50 Cm

27 Cm

WINDOW ISLAMIC-3



100 Cm

150 Cm

WINDOW ISLAMIC-4

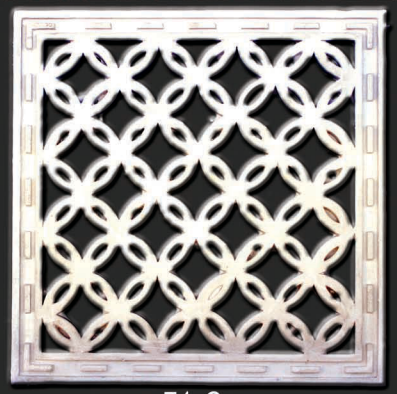

71 Cm

71 Cm

WINDOW ISLAMIC-6

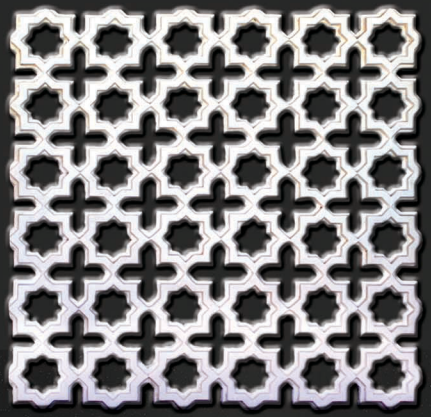

83 Cm

79 Cm

WINDOW ISLAMIC-7

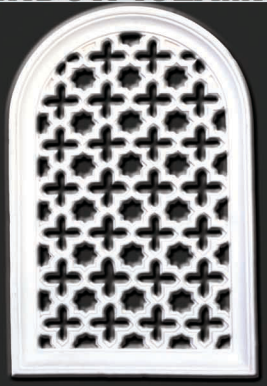

114 Cm

60 Cm

WINDOW ISLAMIC-9



112 Cm

94 Cm

WINDOW ISLAMIC-A

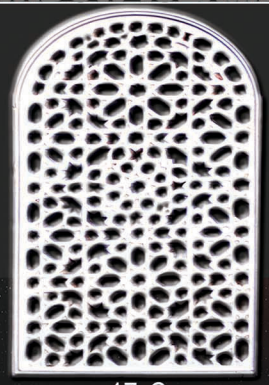

93 Cm

47 Cm

Decor

ديكور

WINDOW ISLAMIC-B



KABOLI-3



KABOLI-6



KABOLI-9



KABOLI-1



KABOLI-4



KABOLI-7



KABOLI-10



KABOLI-2



KABOLI-5



KABOLI-8



KABOLI-11



Decor

ديكور

KABOLI-12



KABOLI-19



KABOLI-ARCH-21



KABOLI-24



KABOLI-13



KABOLI-20



KABOLI-22



KABOLI-25



KABOLI-18



KABOLI-21

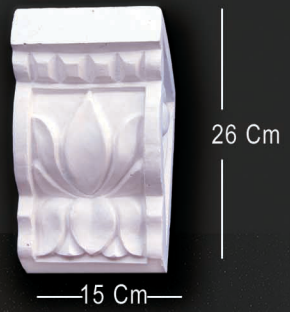

KABOLI-23



KABOLI-26

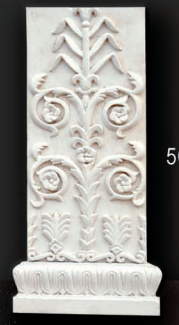

Decor

ديكور

DOME-1



155 Cm

DOME-3



126 Cm

DOME-4



112 Cm

DOME-6



127 Cm

DOME-2



152 Cm

DOME-3-A



102 Cm

DOME-5



160 Cm

DOME-7



60 Cm

60 Cm

Dome

قبب

DOME-8



35 Cm

DOME-10



165 Cm

DOME-12



DOME-9



160 Cm

DOME-11



DOME-13



87 Cm

Dome

قبب

TL.3118



48 Cm

97 Cm

TL.3119



60 Cm

60 Cm

TL.3120



60 Cm

60 Cm

TL.3122



75 Cm

70 Cm

TL.3123



70 Cm

70 Cm

TL.3124



49 Cm

144 Cm

TL.3125



74 Cm

74 Cm

TL.3126



50 Cm

100 Cm

TL.3127



64 Cm

64 Cm

TILES

بلاطات جبسية

TL.3201

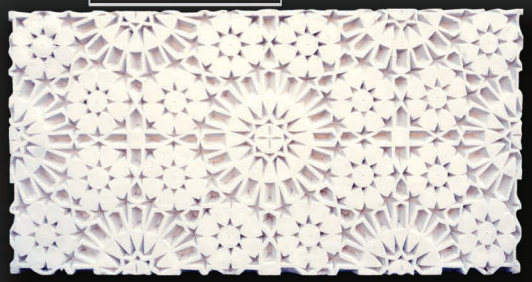

47 Cm

94 Cm

TL.4201



62 Cm

100 Cm

TL.4204



82 Cm

116 Cm

TL.4100



59 Cm

59 Cm

TL.4202



60 Cm

90 Cm

TL.4205

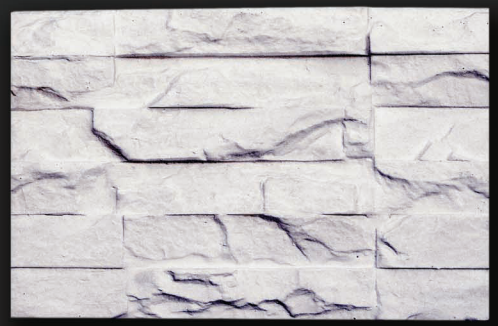

59 Cm

93 Cm

TL.4200



80 Cm

80 Cm

TL.4203

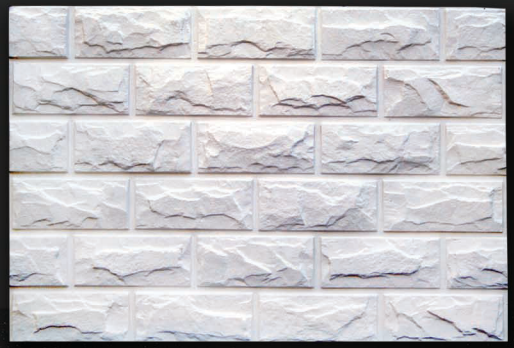

70 Cm

98 Cm

TL.4206

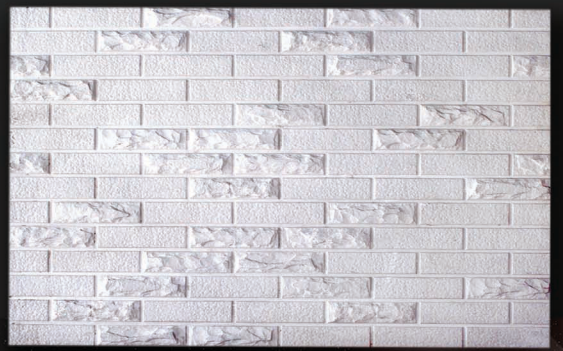

85 Cm

123 Cm

TILES

بلاطات جبسية

TL.4207

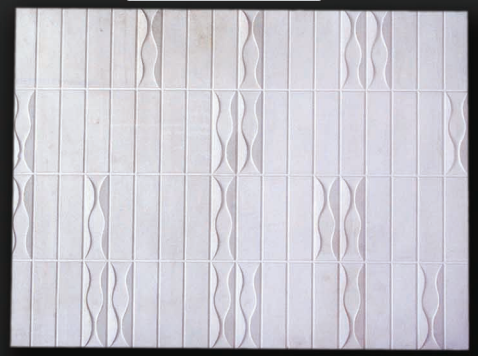

85 Cm

108 Cm

TL.4208

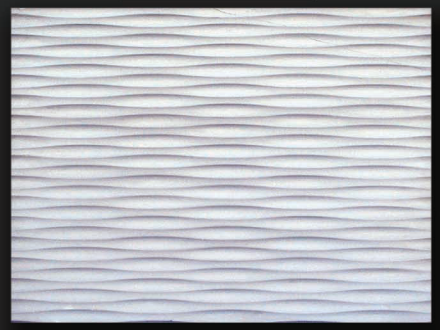

80 Cm

90 Cm

TL.4209



82 Cm

92 Cm

TL.4210



54 Cm

54 Cm

TL.4211



70 Cm

70 Cm

TL.4212



54 Cm

54 Cm

TL.4213

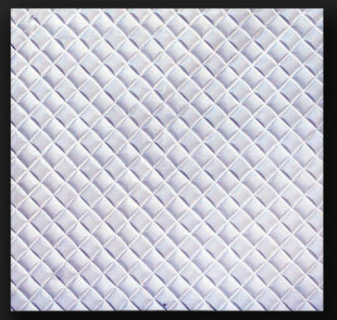

57 Cm

57 Cm

TL.4214

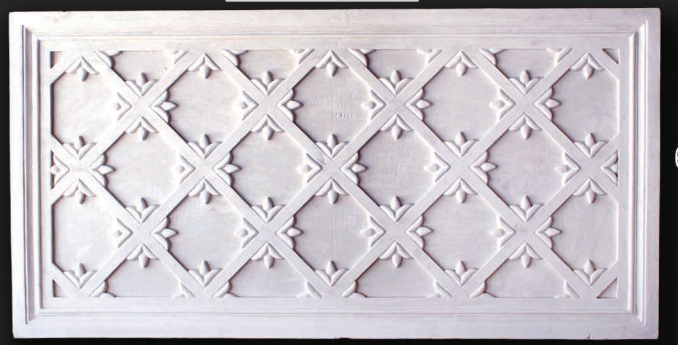

65 Cm

127 Cm

TL.4215

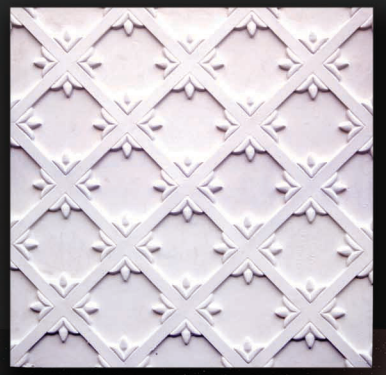

72 Cm

72 Cm

TILES

بلاطات جبسية

TL.4217

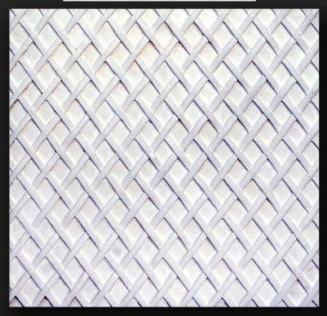

TL.4220



TL.4223

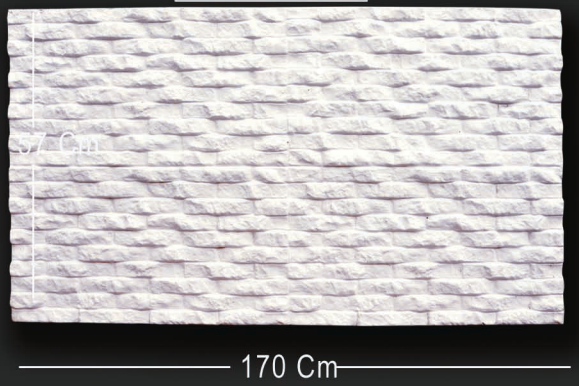

TL.4218

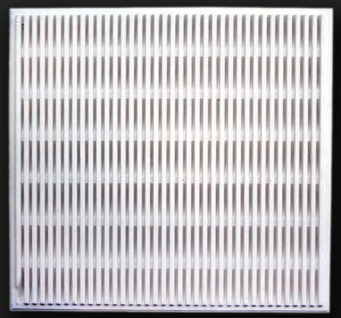

TL.4221

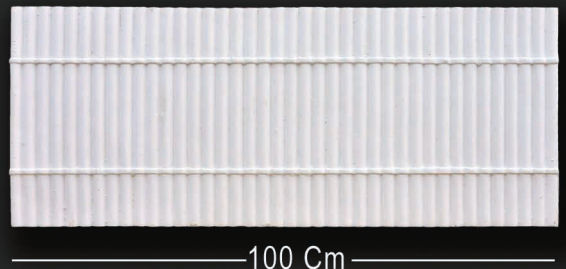

TL.4224



TL.4219



TL.4222



TL.4225



TILES

بلاطات جبسية

TL.7241



TL.ISLAMIC-1

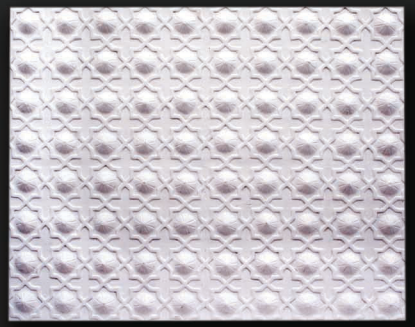

TL.ISLAMIC-2

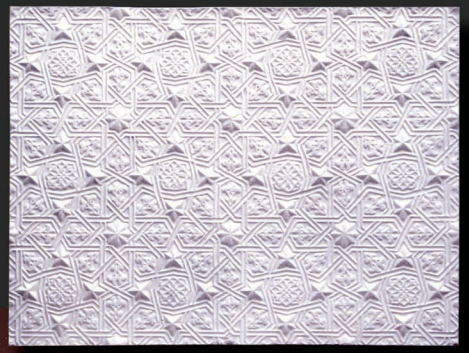

TL.ISLAMIC-3

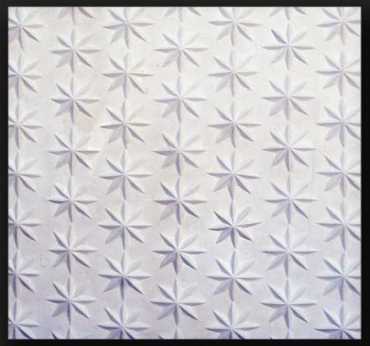

TL.ISLAMIC-4



TL.ISLAMIC-5



TL.ISLAMIC-5A



TL.ISLAMIC-6



TL.ISLAMIC-7

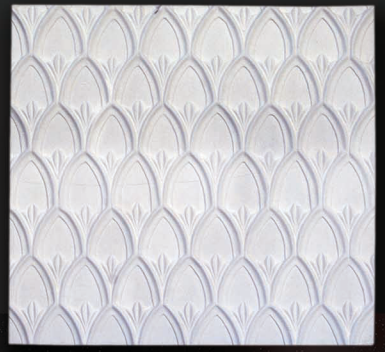

TILES

بلاطات جبسية

TL.ISLAMIC-8



TL.ISLAMIC-8-A



TL.ISLAMIC-9



TL.ISLAMIC-10



TL.ISLAMIC-11

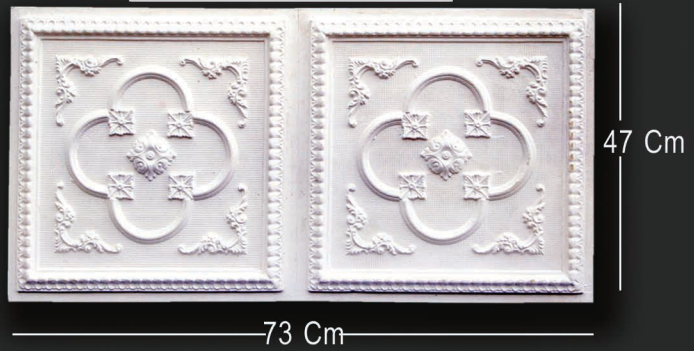

TL.ISLAMIC-14



TL.ISLAMIC-14-A



TL.ISLAMIC-15



TL.ISLAMIC-16



TILES

بلاطات جبسية

TL.ISLAMIC-17



60 Cm

133 Cm

TL.ISLAMIC-3200

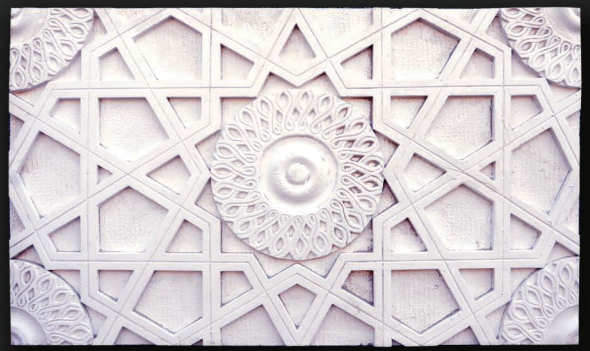

49 Cm

83 Cm

TL.MOROCO-14-A



59 Cm

59 Cm

TL.ISLAMIC-20

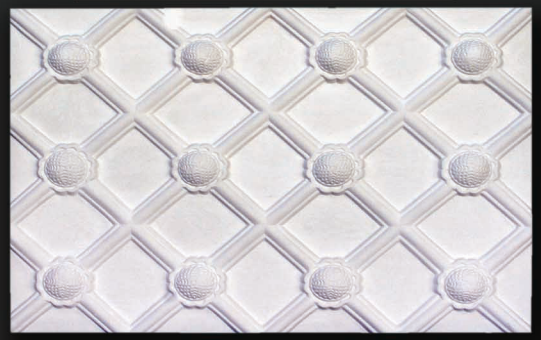

60 Cm

81 Cm

TL.MOROCO-13



73 Cm

100 Cm

TL.MOROCO-15



58 Cm

58 Cm

TL.ISLAMIC-22

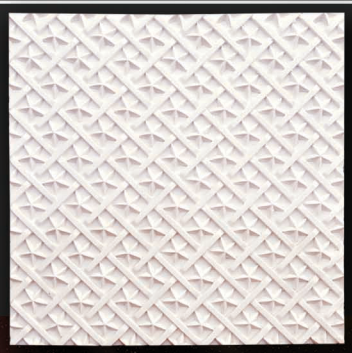

63 Cm

63 Cm

TL.MOROCO-14



54 Cm

54 Cm

TL.MOROCO-16



64 Cm

64 Cm

TILES

بلاطات جبسية

GRG-401



GRG-404



GRG-407

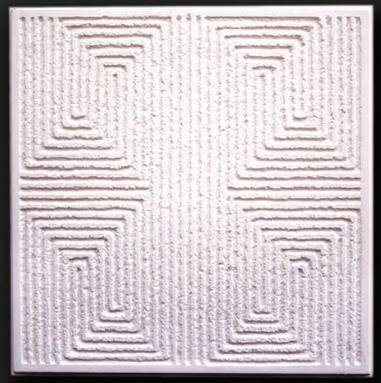

GRG-410



GRG-402



GRG-405



GRG-408



GRG-411



GRG-403



GRG-406



GRG-409



GRG-412



G.R.G. Tiles

بلاطات (جي . أر . جي)

GRG-413



GRG-416



GRG-419



GRG-505



GRG-414



GRG-417



GRG-421

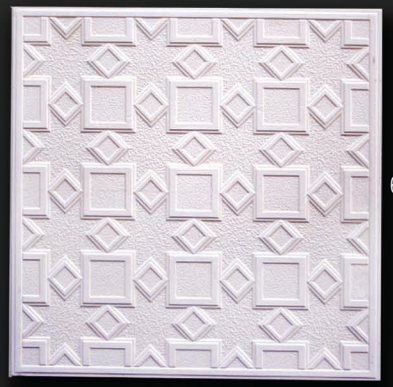

GRG-601



GRG-415



GRG-418



GRG-422



GRG-602

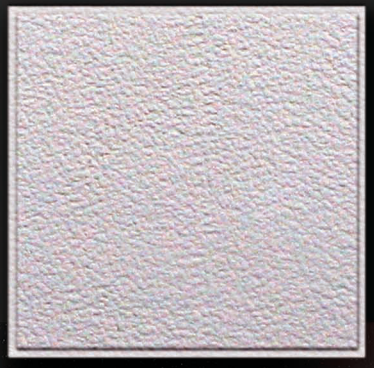

G.R.G. Tiles

بلاطات (جي . أر . جي)

GRG-603



GRG-607



GRG-610



GRG-613

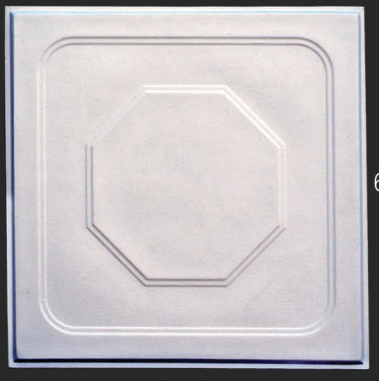

GRG-604



GRG-608



GRG-611

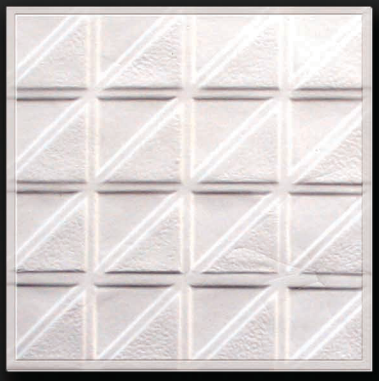

GRG-614



GRG-605



GRG-609



GRG-612



GRG-615



G.R.G. Tiles

بلاطات (جي . أر . جي)

GRG-616

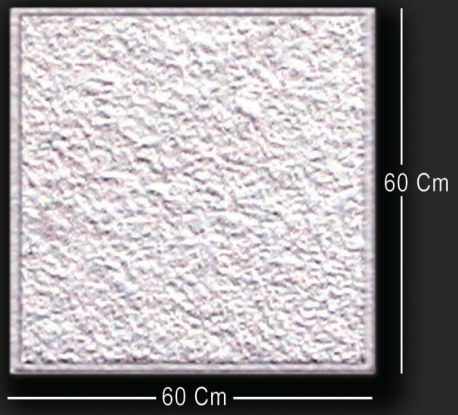

GRG-620

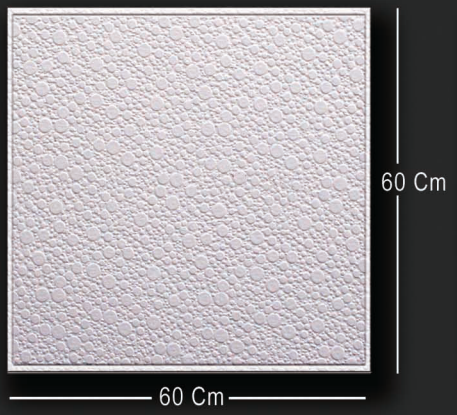

GRG-623

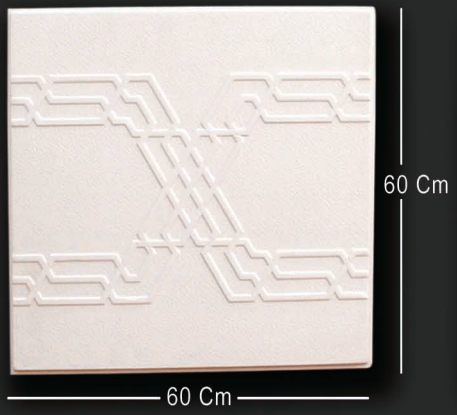

GRG-626

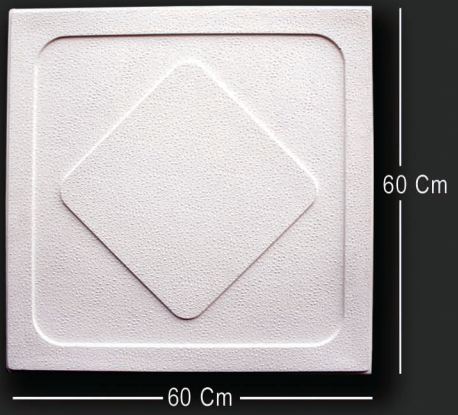

GRG-618

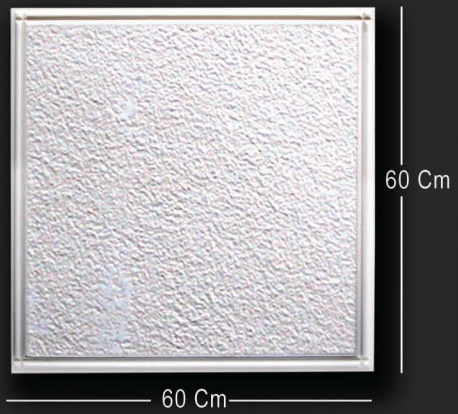

GRG-621

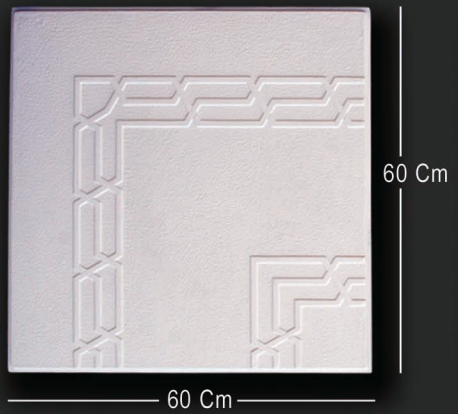

GRG-624

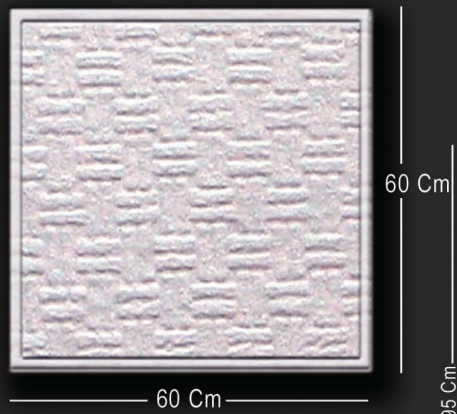

G.R.G.SET

GRG-621+GRG-622+GRG-623



GRG-619



GRG-622

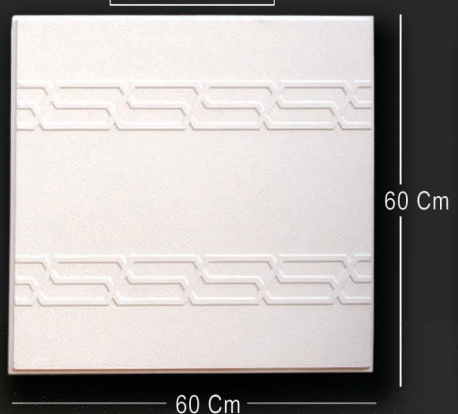

GRG-625

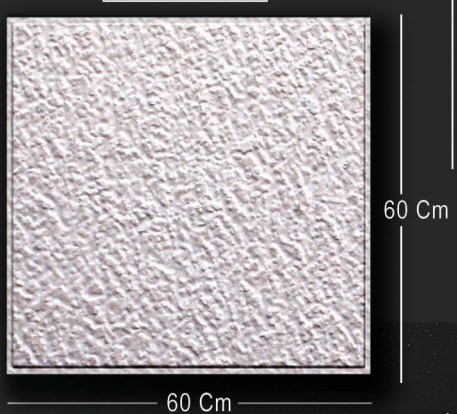

G.R.G. Tiles

بلاطات (جي . أر . جي)

GTC-101



GTC-105



GTC-108



GTC-116

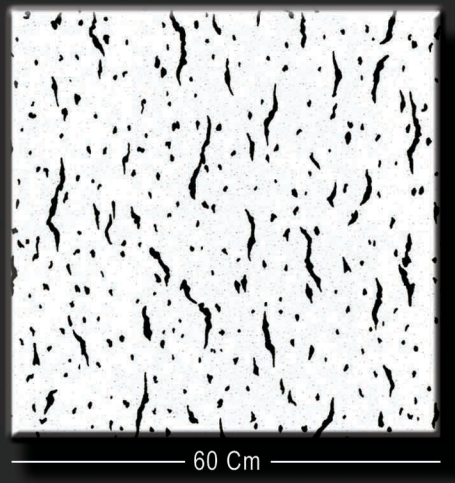

GTC-104



GTC-107



GTC-114

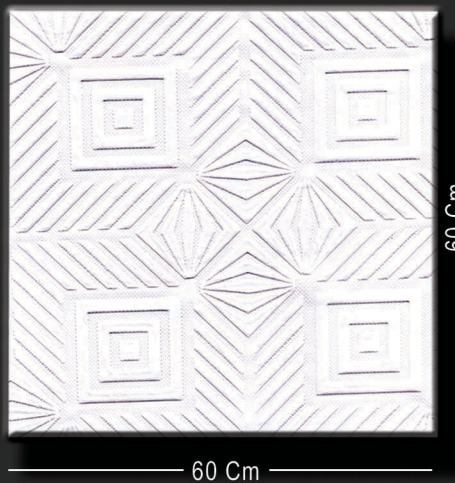

GTC-121



GTC-122



GTC-125



GTC-127



GTC-123



GTC-126



GTC-128

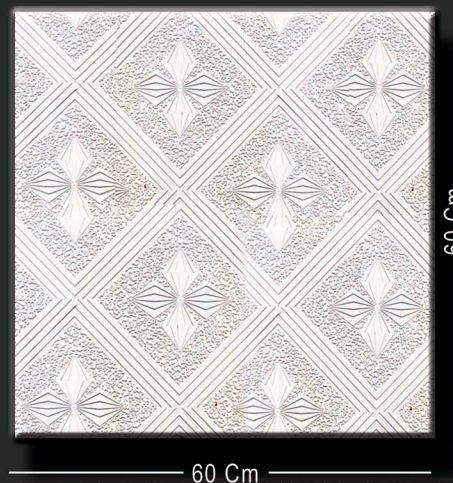

ROAD ROUTE MAP

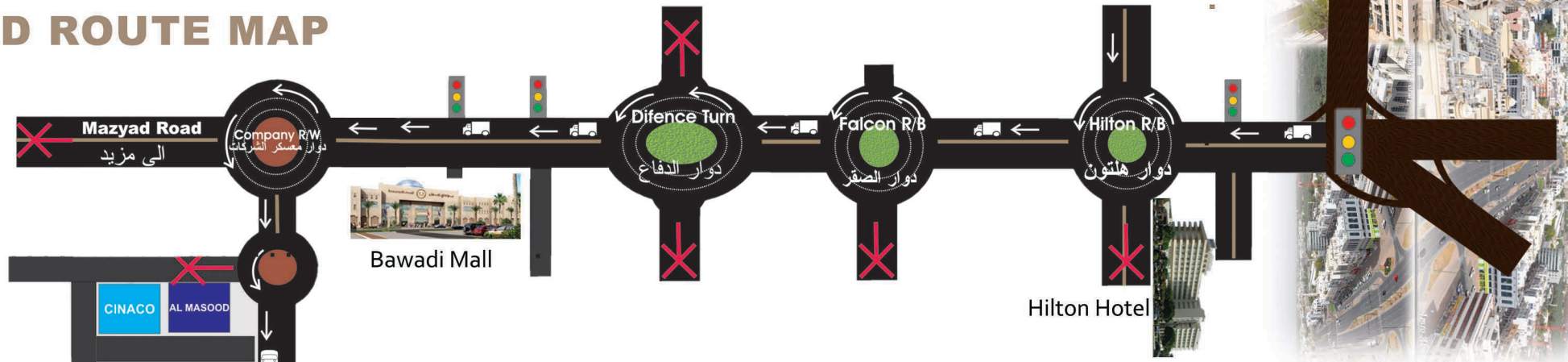



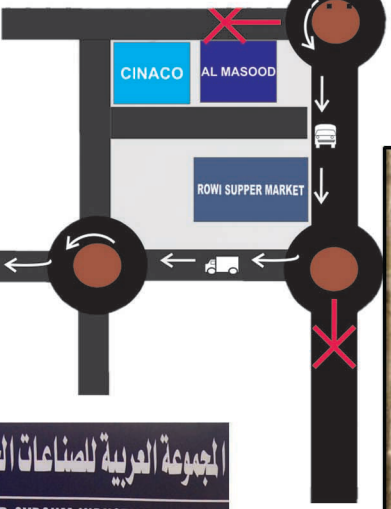

المجموعة العربية للصناعات الجبسية والديكورات
ARABIAN GROUP FOR GYPSUM INDUSTRIES & DECOR
TEL. : 03-7825280 FAX: 03-7825220 P. O. BOX 1219

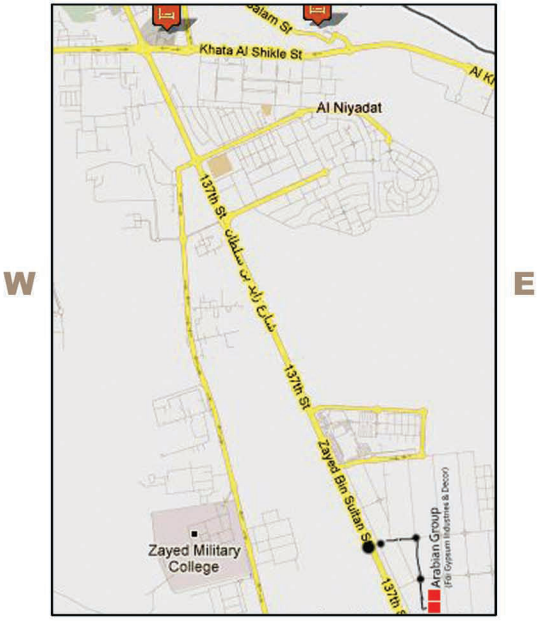



ARABIAN GROUP

FOR GYPSUM INDUSTRIES & DECOR

المجموعة العربية

للصناعات الجبسيه و الديكور

AL - AIN

Tel. : +971 3 7825280 - 7824440 - Fax : +971 3 7825220

P. O. Box : 1219 - Al Ain - United Arab Emirates

Web : www.aggypsum.com

E-mail: arabian@emirates.net.ae